# ENGINE

## CONTENTS

ENGINE <4G9-GDI> ..... 11A

ENGINE <4G1-MPI> ..... 11B

ENGINE <4G9-MPI> ..... 11C

# ENGINE
# <4G9-GDI>

## CONTENTS


**GENERAL INFORMATION ..... 3**

**SERVICE SPECIFICATIONS ..... 3**

**SEALANTS ..... 4**

**SPECIAL TOOLS ..... 5**

**ON-VEHICLE SERVICE ..... 7**

- Drive Belt Tension Check and Adjustment ..... 7
- Ignition Timing Check ..... 10
- Idle Speed Check ..... 11
- Idle Mixture Check ..... 11
- Compression Pressure Check ..... 12
- Manifold Vacuum Check ..... 13
- Lash Adjuster Check ..... 14

**CRANKSHAFT PULLEY ..... 17**

**CAMSHAFT AND CAMSHAFT OIL SEAL ... 18**

**OIL PAN ..... 22**

**CRANKSHAFT OIL SEAL ..... 24**

**CYLINDER HEAD GASKET ..... 26**

**TIMING BELT ..... 29**

**ENGINE ASSEMBLY ..... 34**

# GENERAL INFORMATION

| Items | | | 4G93-GDI |
|---|---|---|---|
| Total displacement mℓ | | | 1,834 |
| Bore × Stroke mm | | | 81 × 89 |
| Compression ratio | | | 11.6 |
| Combustion chamber | | | Pentroof + ball-in-piston |
| Camshaft arrangement | | | DOHC |
| Number of valve | Intake | | 8 |
| | Exhaust | | 8 |
| Valve timing | Intake | Opening | BTDC 15° |
| | | Closing | ABDC 56° |
| | Exhaust | Opening | BBDC 55° |
| | | Closing | ATDC 15° |
| Fuel system | | | Electronically controlled multipoint fuel injection |
| Rocker arm | | | Roller type |
| Auto-lash adjuster | | | Equipped |

# SERVICE SPECIFICATIONS

| Items | | Standard value | Limit |
|---|---|---|---|
| Alternator drive belt tension (When checked) | Vibration frequency Hz | 143 – 185 | – |
| | Tension N | 294 – 490 | – |
| | Deflection (Reference value) mm | 9.7 – 12.9 | – |
| Alternator drive belt tension (When adjusted) | Vibration frequency Hz | 155 – 175 | – |
| | Tension N | 343 – 441 | – |
| | Deflection (Reference value) mm | 10.5 – 12.0 | – |
| Alternator drive belt tension (When replaced) | Vibration frequency Hz | 203 – 234 | – |
| | Tension N | 588 – 784 | – |
| | Deflection (Reference value) mm | 6.7 – 8.5 | – |

| Items | | Standard value | Limit |
|---|---|---|---|
| Power steering oil pump and A/C compressor drive belt tension (When checked) | Vibration frequency Hz | 114 – 139 | – |
| | Tension N | 392 – 588 | – |
| | Deflection (Reference value) mm | 10.0 – 12.0 | – |
| Power steering oil pump and A/C compressor drive belt tension (When adjusted) | Vibration frequency Hz | 121 – 133 | – |
| | Tension N | 441 – 539 | – |
| | Deflection (Reference value) mm | 10.0 – 11.0 | – |
| Power steering oil pump and A/C compressor drive belt tension (When replaced) | Vibration frequency Hz | 145 – 166 | – |
| | Tension N | 637 – 833 | – |
| | Deflection (Reference value) mm | 7.0 – 9.0 | – |
| Basic ignition timing | | 5° BTDC ± 3° | – |
| Ignition timing | | Approx. 16°BTDC*1 | – |
| Idle speed r/min | | 600 ± 50*1 | – |
| CO contents % | | 0.6 or less | – |
| HC contents ppm | | 200 or less | – |
| Compression pressure kPa – r/min | | 1,720 – 300 | 1,337 – 300 |
| Compression pressure difference of all cylinder kPa | | – | Max. 100 |
| Intake manifold vacuum kPa | | – | Min. 60*2 |
| Cylinder head bolt shank length mm | | – | 96.4 |
| Auto-tensioner push rod movement mm | | Within 1 | – |
| Timing belt tension torque Nm (Reference value) | | 2.5 – 4.0 | – |
| Auto-tensioner rod protrusion amount mm | | 3.8 – 4.5 | – |

NOTE
*1: Indicates the value measured within 4 minutes since the engine was started.
*2: Indicates the value when more than 4 minutes have passed since the engine was started.

# SEALANTS

| Items | Specified sealants | Remarks |
|---|---|---|
| Beam camshaft cap<br>Cylinder head | 3M ATD Part No.8660 or equivalent | – |
| Cam position sensor support<br>Oil pan | MITSUBISHI GENUINE PART MD970389 or equivalent | Semi-drying sealant |
| Thrust case<br>Flywheel or drive plate bolt | 3M Stud Locking 4170 or equivalent | – |

# SPECIAL TOOLS

| Tool | Number | Name | Use |
|---|---|---|---|
| 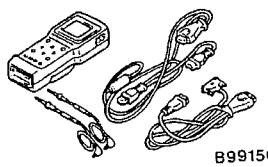 B991502 | MB991502 | MUT-II sub assembly | • Measuring the drive belt tension<br>• Checking the ignition timing<br>• Checking the idle speed<br>• Erasing diagnosis code |
| 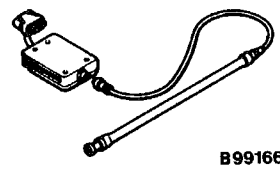 B991668 | MB991668 | Belt tension meter set | Measuring the drive belt tension (used together with the MUT-II) |
| 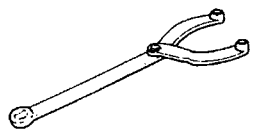 | MB990767 | End yoke holder | • Holding the camshaft sprocket<br>• Holding the crankshaft sprocket |
| 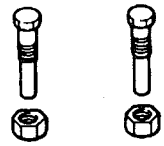 | MD998719 or MD998754 | Crankshaft pulley holder pin | • Holding the camshaft sprocket<br>• Holding the crankshaft sprocket |
| 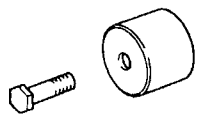 | MD998713 | Camshaft oil seal installer | Press-in of the camshaft oil seal |
| 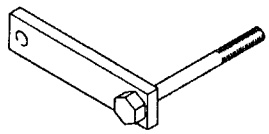 | MD998781 | Flywheel stopper | Securing the flywheel or drive plate |
| 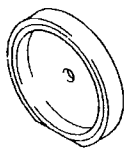 | MD998776 | Crankshaft rear oil seal installer | Press-in of the crankshaft rear oil seal |
| 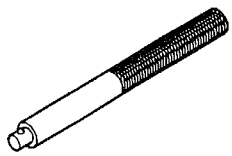 | MB990938 | Handle | Press-in of the crankshaft rear oil seal |
| 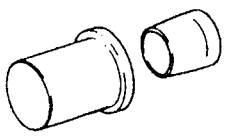 | MD998717 | Crankshaft front oil seal installer | Press–in of crankshaft front oil seal |

| Tool | Number | Name | Use |
|---|---|---|---|
| 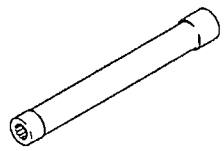 | MB991653 | Cylinder head bolt wrench | Cylinder head bolt removal and installation |
| 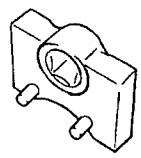 | MD998767 | Tension pulley socket wrench | Timing belt tension adjustment |

# ON-VEHICLE SERVICE

## DRIVE BELT TENSION CHECK AND ADJUSTMENT

### ALTERNATOR DRIVE BELT TENSION CHECK

Check the drive belt tension in the following procedure.

**Standard value:**

| | |
|---|---|
| Vibration frequency Hz | 143 – 185 |
| Tension N | 294 – 490 |
| Deflection (Reference value) mm | 9.7 – 12.9 |

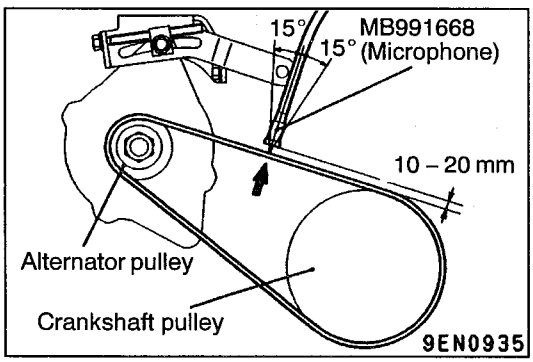


**<When using the MUT-II>**

1. Connect the special tool (belt tension meter set) to the MUT-II.
2. Connect the MUT-II to the diagnosis connector.
3. Turn the ignition switch to ON and select "Belt Tension Measurement" from the menu screen.
4. Hold the microphone to the middle of the drive belt between the pulleys (at the place indicated by the arrow), about 10 – 20 mm away from the rear surface of the belt and so that it is perpendicular to the belt (within an angle of ± 15°).
5. Gently tap the middle of the belt between the pulleys (the place indicated by the arrow) with your finger as shown in the illustration, and check that the vibration frequency of the belt is within the standard value.

**Caution**

**(1) The temperature of the surface of the belt should be as close as possible to normal temperature.**
**(2) Do not let any contaminants such as water or oil get onto the microphone.**
**(3) If strong gusts of wind blow against the microphone or if there are any loud sources of noise nearby, the values measured by the microphone may not correspond to actual values.**
**(4) If the microphone is touching the belt while the measurement is being made, the values measured by the microphone may not correspond to actual values.**
**(5) Do not take the measurement while the vehicle's engine is running.**

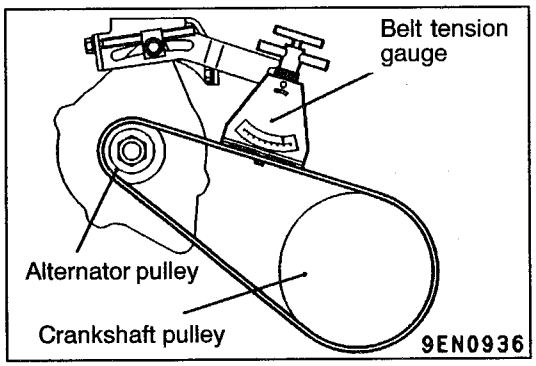


**<When using a tension gauge>**

Use a belt tension gauge to check that the belt tension is within the standard value.

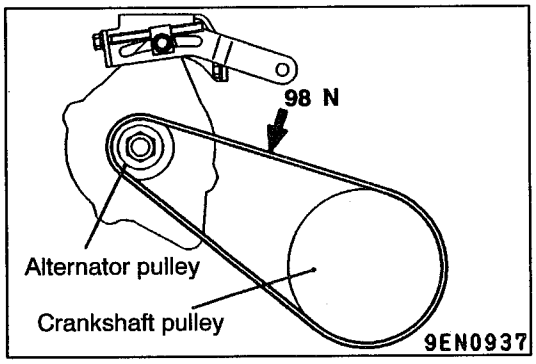


**<Belt deflection check>**

Apply 98 N of force to the middle of the drive belt between the pulleys (at the place indicated by the arrow) and check that the amount of deflection is within the standard value.

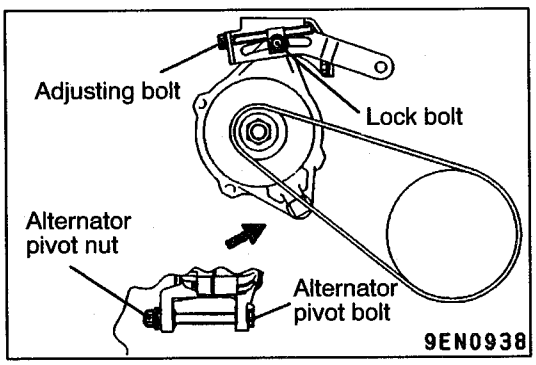


## ALTERNATOR DRIVE BELT TENSION ADJUSTMENT

1. Loosen the nut of the alternator pivot bolt.
2. Loosen the lock bolt.
3. Use the adjusting bolt to adjust the belt tension and belt deflection to the standard values.

   **Standard value:**

| Items | When adjusted | When replaced |
|---|---|---|
| Vibration frequency Hz | 155 – 175 | 203 – 234 |
| Tension N | 343 – 441 | 588 – 784 |
| Deflection (Reference value) mm | 10.5 – 12.0 | 6.7 – 8.5 |

4. Tighten the nut of the alternator pivot bolt.

   **Tightening torque: 44 Nm**
5. Tighten the lock bolt.

   **Tightening torque: 22 Nm**
6. Tighten the adjusting bolt.

   **Tightening torque: 5 Nm**

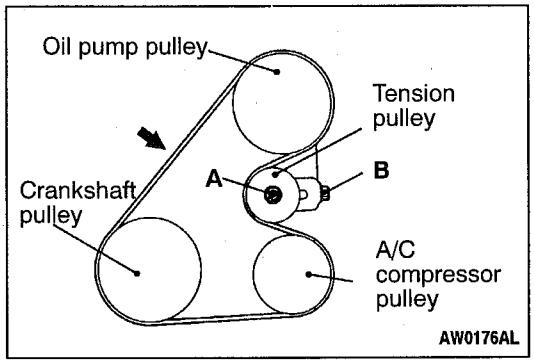


## POWER STEERING OIL PUMP AND AIR CONDITIONER COMPRESSOR DRIVE BELT TENSION CHECK AND ADJUSTMENT

1. Check if the belt tension is within the standard value using one of the methods below.

**Standard value:**

| Items | When checked | When adjusted | When replaced |
|---|---|---|---|
| Vibration frequency Hz | 114 – 139 | 121 – 133 | 145 – 166 |
| Tension N | 392 – 588 | 441 – 539 | 637 – 834 |
| Deflection (Reference value) mm | 10.0 – 12.0 | 10.0 – 11.0 | 7.0 – 9.0 |

**<When measuring the vibration frequency>**

With your finger tip lightly tap the centre of the belt between the pulleys in the location shown by the arrow in the illustration and then measure the belt vibration frequency.

NOTE
Refer to P.11A-7 for information regarding the vibration frequency measurement method using MUT-II.

**<When measuring the tension>**

Use a belt tension gauge to measure the belt tension.

**<When measuring the deflection>**

Apply 98 N of pressure against the location between the pulleys shown by the arrow in the illustration and then measure the deflection.

2. If the tension or deflection is outside the standard value, adjust by the following procedure.
   (1) Loosen tensioner pulley fixing nut A.
   (2) Adjust the amount of belt deflection using adjusting bolt B.
   (3) Tighten fixing nut A.

   **Tightening torque: 25 Nm**

   (4) Check the belt deflection amount and tension, and readjust if necessary.

   **Caution**
   **Check after turning the crankshaft once or more clockwise (right turn).**

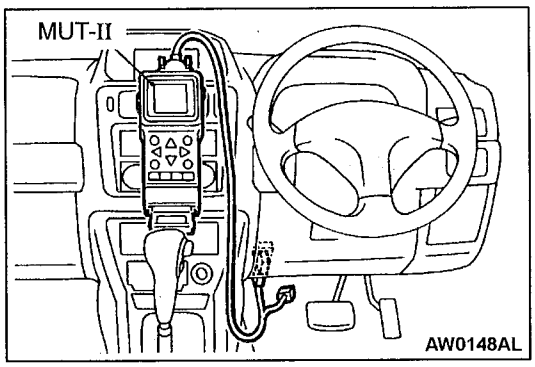


## IGNITION TIMING CHECK

1. Before inspection, set the vehicle to the pre-inspection condition.
2. Connect the MUT-II to the diagnosis connector.

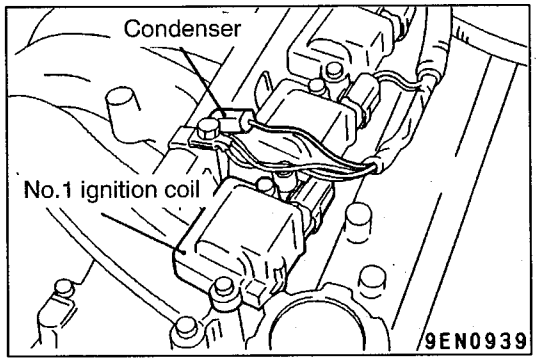


3. Set the timing light to the condenser of the No.1 ignition coil power supply line (terminal No.3).
4. Start the engine and run at idle.
5. Check that engine idle speed is within the standard value.

   **Standard value: 600 ± 50 r/min**

   NOTE
   After 4 minutes or more have passed in the idle running condition, the idle speed will become 750 r/min.
6. Select No.17 of the MUT-II Actuator test.

   NOTE
   At this time, the engine speed will become approximately 750 r/min.
7. Check that basic ignition timing is within the standard value.

   **Standard value: 5° BTDC ± 3°**
8. If the basic ignition timing is outside the standard value, inspect the GDI system while referring to GROUP 13A – Troubleshooting.
9. Press the MUT-II clear key (Select a forced driving cancel mode) to release the Actuator test.

   **Caution**
   **If the test is not cancelled, a forced driving will continue for 27 minutes. Driving under this condition may damage the engine.**
10. Check that ignition timing is at the standard value.

    **Standard value: approx. 16°BTDC**

    NOTE
    (1) The ignition timing will become approximately 5°BTDC after more than 4 minutes have passed since the basic ignition timing set mode was released.
    (2) The ignition timing may fluctuate within ±7°BTDC. This is normal.
    (3) In higher altitude, the ignition timing is more advanced than the standard value by approximately 5 degree.

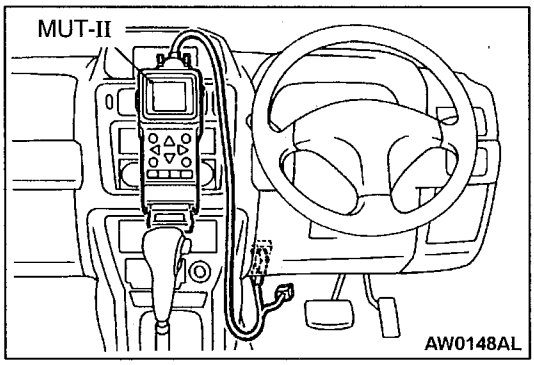


## IDLE SPEED CHECK

1. Before inspection, set the vehicle to the pre-inspection condition.
2. Turn off the ignition switch and then connect the MUT-II to the diagnosis connector.
3. Check the basic ignition timing.

   NOTE
   Refer to P.11A-10 concerning the check procedure of the basic ignition timing.

   **Standard value: 5° BTDC ± 3°**
4. Run the engine at idle for 2 minutes.
5. Check the idle speed. Select item No. 22 and take a reading of the idle speed.

   **Standard value: 600 ± 50 r/min**

   NOTE
   (1) After 4 minutes or more have passed in the idle running condition, the idle speed will become 750 r/min.
   (2) The idle speed is controlled automatically by the idle speed control system.
6. If the idle speed is outside the standard value, inspect the GDI components by referring to GROUP 13A – Troubleshooting.

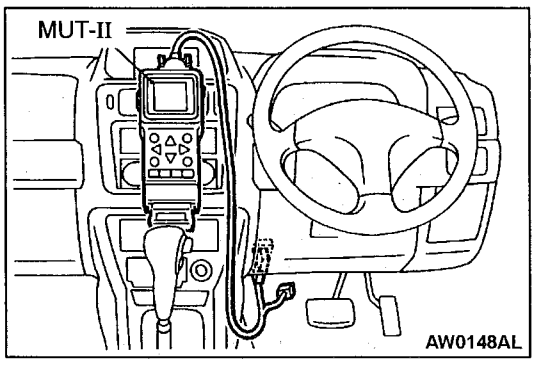


## IDLE MIXTURE CHECK

1. Before inspection, set the vehicle to the pre-inspection condition.
2. Connect the MUT-II to the diagnosis connector.
3. Check that the basic ignition timing is within the standard value.

   NOTE
   Refer to P.11A-10 concerning the check procedure of the basic ignition timing.

   **Standard value: 5° BTDC ± 3°**
4. Run the engine at 2,500 r/min for 2 minutes.
5. Set the CO, HC tester.

6. Check the CO contents and the HC contents at idle.

   NOTE
   This measurement should be performed in less than approximately 4 minutes since the engine speed become the idle speed.

   **Standard value**
   **CO contents: 0.6% or less**
   **HC contents: 200 ppm or less**

7. If there is a deviation from the standard value, check the following items:
   - Diagnosis output
   - Fuel pressure
   - Injector
   - Ignition coil, spark plug
   - EGR control system
   - Evaporative emission control system
   - Compression pressure

   NOTE
   Replace the three way catalyst when the CO and HC contents are not within the standard value, even though the result of the inspection is normal on all items.

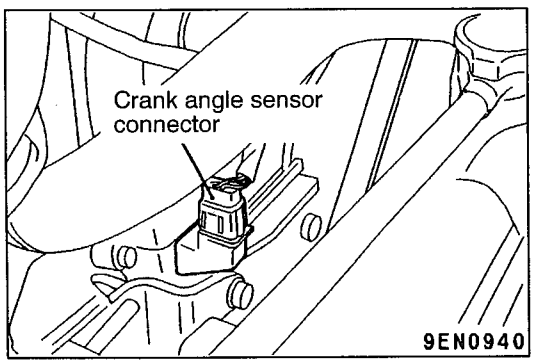


## COMPRESSION PRESSURE CHECK

1. Before inspection, check that the engine oil, starter and battery are normal. In addition, set the vehicle to the pre-inspection condition.
2. Remove all of the ignition coils and spark plugs.
3. Disconnect the crank angle sensor connector.

   NOTE
   Doing this will prevent the engine-ECU from carrying out ignition and fuel injection.

4. Cover the spark plug hole with a shop towel etc., and after the engine has been cranked, check that no foreign material is adhering to the shop towel.

   **Caution**
   **(1) Keep away from the spark plug hole when cranking.**
   **(2) If compression is measured with water, oil, fuel, etc., that has come from cracks inside the cylinder, these materials will become heated and will gush out from the spark plug hole, which is dangerous.**

5. Set compression gauge to one of the spark plug holes.
6. Crank the engine with the throttle valve fully open and measure the compression pressure.

   **Standard value (at engine speed of 300 r/min):**
   **1,720 kPa**

   **Limit (at engine speed of 300 r/min):**
   **Min. 1,337 kPa**

7. Measure the compression pressure for all the cylinders, and check that the pressure differences of the cylinders are below the limit.

   **Limit: Max. 100 kPa**

8. If there is a cylinder with compression or a compression difference that is outside the limit, pour a small amount of engine oil through the spark plug hole, and repeat the operations in steps 6 and 7.
   (1) If the compression increases after oil is added, the cause of the malfunction is a worn or damaged piston ring and/or cylinder inner surface.
   (2) If the compression does not rise after oil is added, the cause is a burnt or defective valve seat, or pressure is leaking from the gasket.
9. Connect the crank angle sensor connector.
10. Install the spark plugs and ignition coils.
11. Use the MUT-II to erase the diagnosis codes.

    NOTE
    This will erase the diagnosis code resulting from the crank angle sensor connector being disconnected.

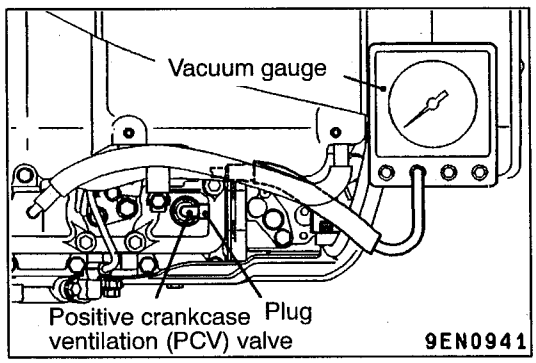


## MANIFOLD VACUUM CHECK

1. Before inspection, set the vehicle to the pre-inspection condition.
2. Turn off the ignition switch.
3. Connect the engine tachometer or connect the MUT-II to the diagnosis connector.
4. Disconnect the ventilation hose from the positive crankcase ventilation (PCV) valve, and then connect a vacuum gauge to the ventilation hose. Plug the positive crankcase ventilation (PCV) valve.
5. Start the engine and run it at idle for 4 minutes or more, and then check the intake manifold vacuum while the engine is idling.

   **Limit: Min. 60 kPa**

6. Turn off the ignition switch.
7. Remove the vacuum gauge, and then connect the ventilation hose to the positive crankcase ventilation (PCV) valve.
8. Remove the engine tachometer or the MUT-II.

## LASH ADJUSTER CHECK

If an abnormal noise (knocking) that seems to be coming from the lash adjuster is heard after starting the engine and does not stop, carry out the following check.

NOTE
(1) The abnormal noise which is caused by a problem with the lash adjusters is generated after the engine is started, and will vary according to the engine speed. However, this noise is not related to the actual engine load.
Because of this, if the noise does not occur immediately after the engine is started, if it does not change in accordance with the engine speed, or if it changes in accordance with the engine load, the source of the noise is not the lash adjusters.
(2) If there is a problem with the lash adjusters, the noise will almost never disappear, even if the engine has been run at idle to let it warm up.
The only case where the noise might disappear is if the oil in the engine has not been looked after properly and oil sludge has caused the lash adjusters to stick.

1. Start the engine.
2. Check that the noise occurs immediately after the engine is started, and that the noise changes in accordance with changes in the engine speed.
If the noise does not occur immediately after the engine is started, or if it does not change in accordance with the engine speed, the problem is not being caused by the lash adjusters, so check for some other cause of the problem. Moreover, if the noise does not change in accordance with the engine speed, the cause of the problem is probably not with the engine. (In these cases, the lash adjusters are normal.)
3. While the engine is idling, check that the noise level does not change when the engine load is varied (for example, by shifting from N → D).
If the noise level changes, the cause of the noise is probably parts striking because of worn crankshaft bearings or connecting rod bearings. (In such cases, the lash adjusters are normal.)
4. After the engine has warmed up, run it at idle and check if any noise can be heard.
If the noise has become smaller or disappeared, oil sludge could make the lash adjusters stick. Clean the lash adjusters. (Refer to the Engine Workshop Manual.) If not improved, go to step 5.
5. Bleed air from the lash adjusters. (Refer to P.11A-15, LASH ADJUSTER AIR BLEEDING.)
6. If the noise has not disappeared even after the air bleeding, clean the lash adjusters. (Refer to the Engine Workshop Manual.)

## <LASH ADJUSTER AIR BLEEDING>

NOTE
(1) If the vehicle is parked on a slope for a long period of time, the amount of oil inside the lash adjuster will decrease, and air may get into the high pressure chamber when starting the engine.
(2) After parking the vehicle for long periods, the oil drains out of the oil passage, and it takes time for the oil to be supplied to the lash adjuster, so air can get into the high pressure chamber.
(3) If either of the above situations occur, the abnormal noise can be eliminated by bleeding the air from inside the lash adjusters.

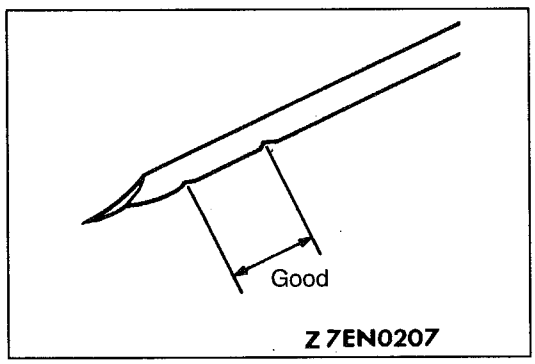


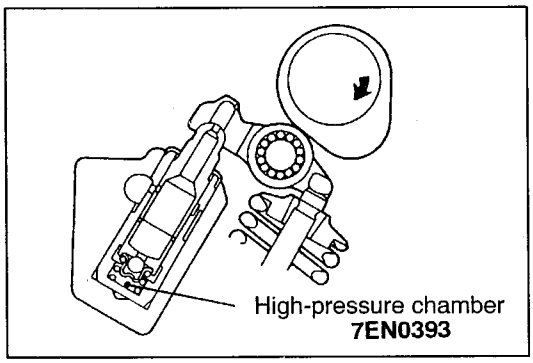


1. Check the engine oil and replenish or replace the oil if necessary.

NOTE
(1) If there is a only small amount of oil, air will be drawn in through the oil screen and will get into the oil passage.
(2) If the amount of oil is greater than normal, then the oil will being mixed by the crankshaft and a large amount of air may get mixed into the oil.
(3) If the oil is degenerated, air and oil will not separate easily in oil, and the amount of air mixed into the oil will increase.
(4) If the air which has been mixed in with the oil due to any of the above reasons gets into the high pressure chamber of the lash adjuster, the air inside the high pressure chamber will be compressed when the valve is open and the lash adjuster will over-compress, resulting in abnormal noise when the valve closes. This is the same effect as if the valve clearance is adjusted to be too large by mistake. If the air inside the lash adjusters is then released, the operation of the lash adjusters will return to normal.

**Drive pattern for air bleeding**

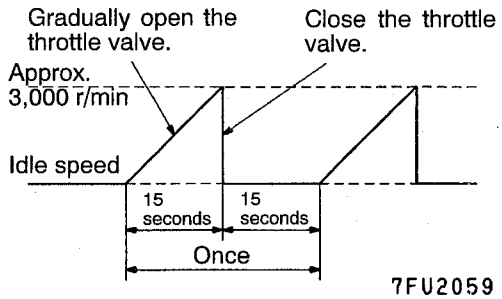


2. Run the engine at idle for 1 – 3 minutes to let it warm up.
3. With no load on the engine, repeat the drive pattern shown in the illustration at left and check if the abnormal noise disappears. (The noise should normally disappear after 10 – 30 repetitions, but if there is no change in the noise level after 30 repetitions or more, the problem is probably not due to air inside the lash adjusters.)
4. After the noise has disappeared, repeat the drive pattern shown in the illustration at left a further 5 times.
5. Run the engine at idle for 1 – 3 minutes and check that the noise has disappeared.

# CRANKSHAFT PULLEY

## REMOVAL AND INSTALLATION

**Pre-removal Operation**
Engine Cover and Under Cover Removal

**Post-installation Operation**
- Drive Belt Tension Adjustment (Refer to P.11A-7.)
- Engine Cover and Under Cover Installation

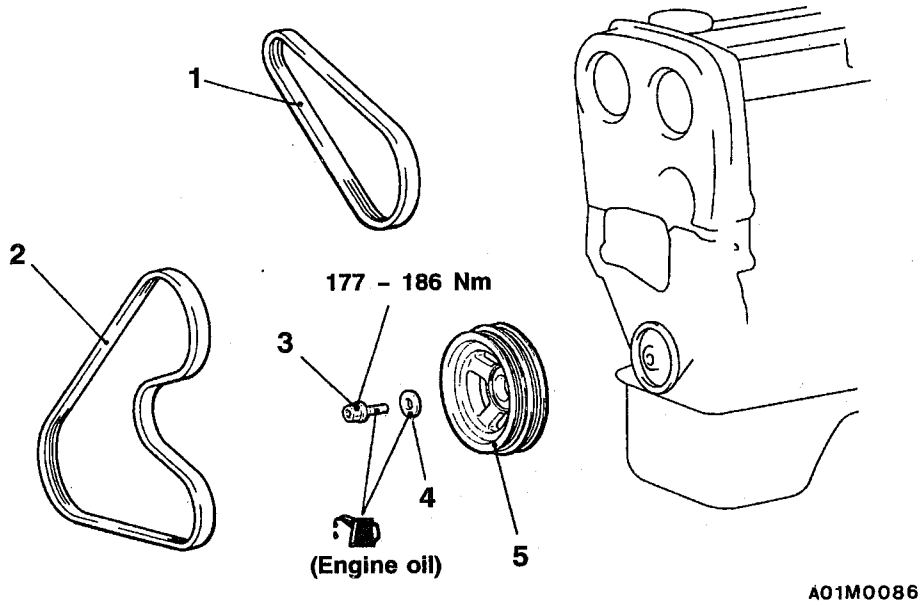


**Removal steps**

1. Drive belt (Power steering and A/C)
2. Drive belt (Alternator)

◀A▶ ▶A◀ 3. Crankshaft pulley bolt
4. Crankshaft pulley washer
5. Crankshaft pulley

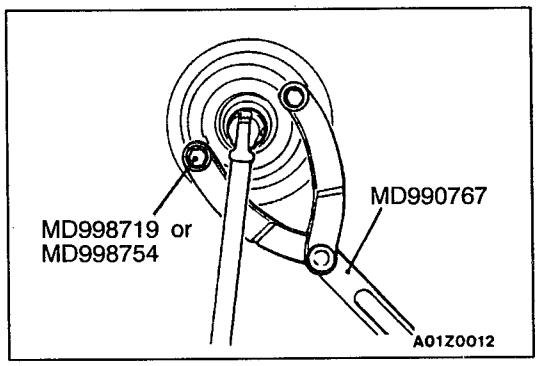


### REMOVAL SERVICE POINT

#### ◀A▶ CRANKSHAFT PULLEY BOLT REMOVAL

### INSTALLATION SERVICE POINT

#### ▶A◀ CRANKSHAFT PULLEY BOLT INSTALLATION

When installing the crankshaft bolt, apply the minimum amount of engine oil to the bearing surface and thread of the bolt.

# CAMSHAFT AND CAMSHAFT OIL SEAL

## REMOVAL AND INSTALLATION

**Pre-removal and Post-installation Operation**
- Air Intake Hose and Resonance Tank Removal and Installation (Refer to GROUP 15 – Air Cleaner and Resonance Tank.)
- Timing Belt Removal and Installation (Refer to P.11A-29.)
- Engine Coolant Draining and Supplying (Refer to GROUP 14 – On-vehicle Service.)
- Intake Manifold Removal and Installation (Refer to GROUP 15.)
- Fuel Pump (High Pressure) and Fuel Pressure Regulator (High Pressure) Removal and Installation (Refer to GROUP 13A.)

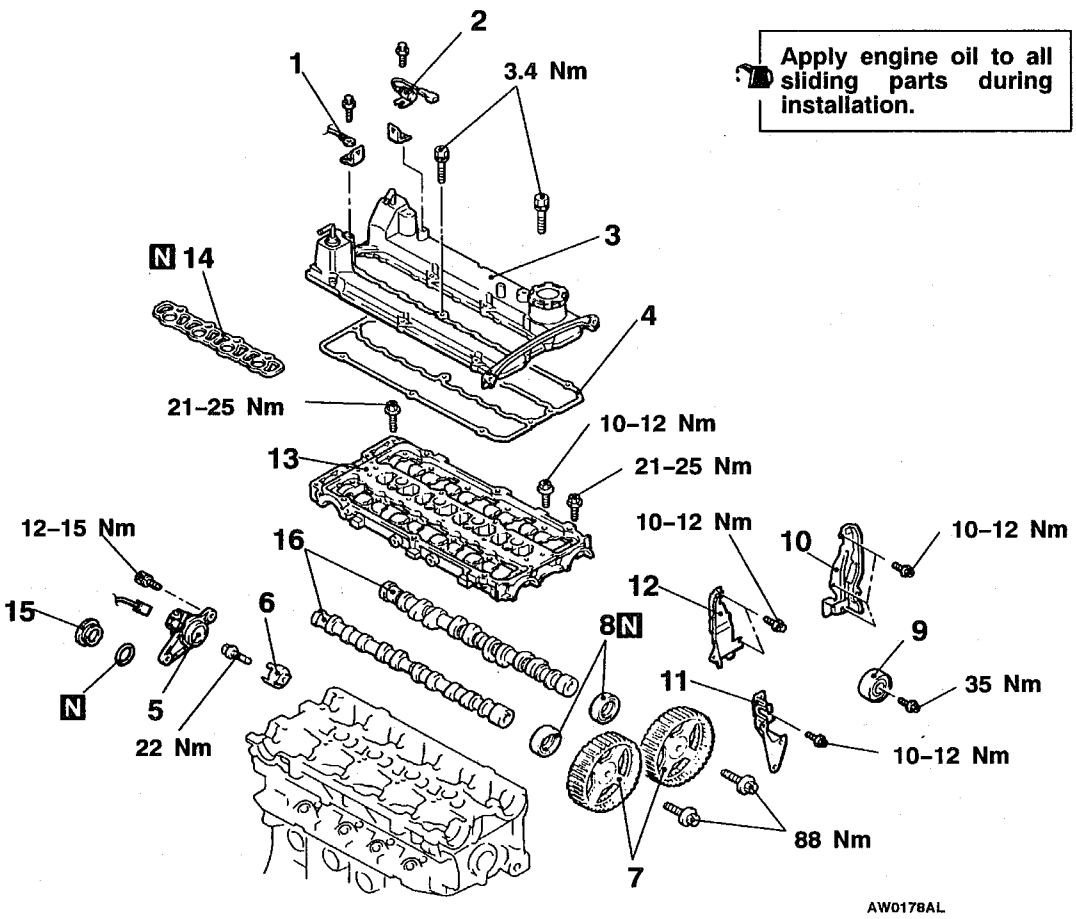


**Removal steps**

1. Earth cable connection
2. Condenser
3. Rocker cover
4. Rocker cover gasket
5. Camshaft position sensor support
6. Camshaft position sensing cylinder
◀A▶ ▶D◀ 7. Camshaft sprocket
▶C◀ 8. Camshaft oil seal
9. Idler pulley
10. Timing belt rear cover, upper (LH)
11. Timing belt rear cover, lower (RH)
12. Timing belt rear cover, upper (RH)
▶B◀ 13. Beam camshaft cap
14. Beam camshaft cap gasket
15. Thrust case
▶A◀ 16. Camshaft

## Lubrication points

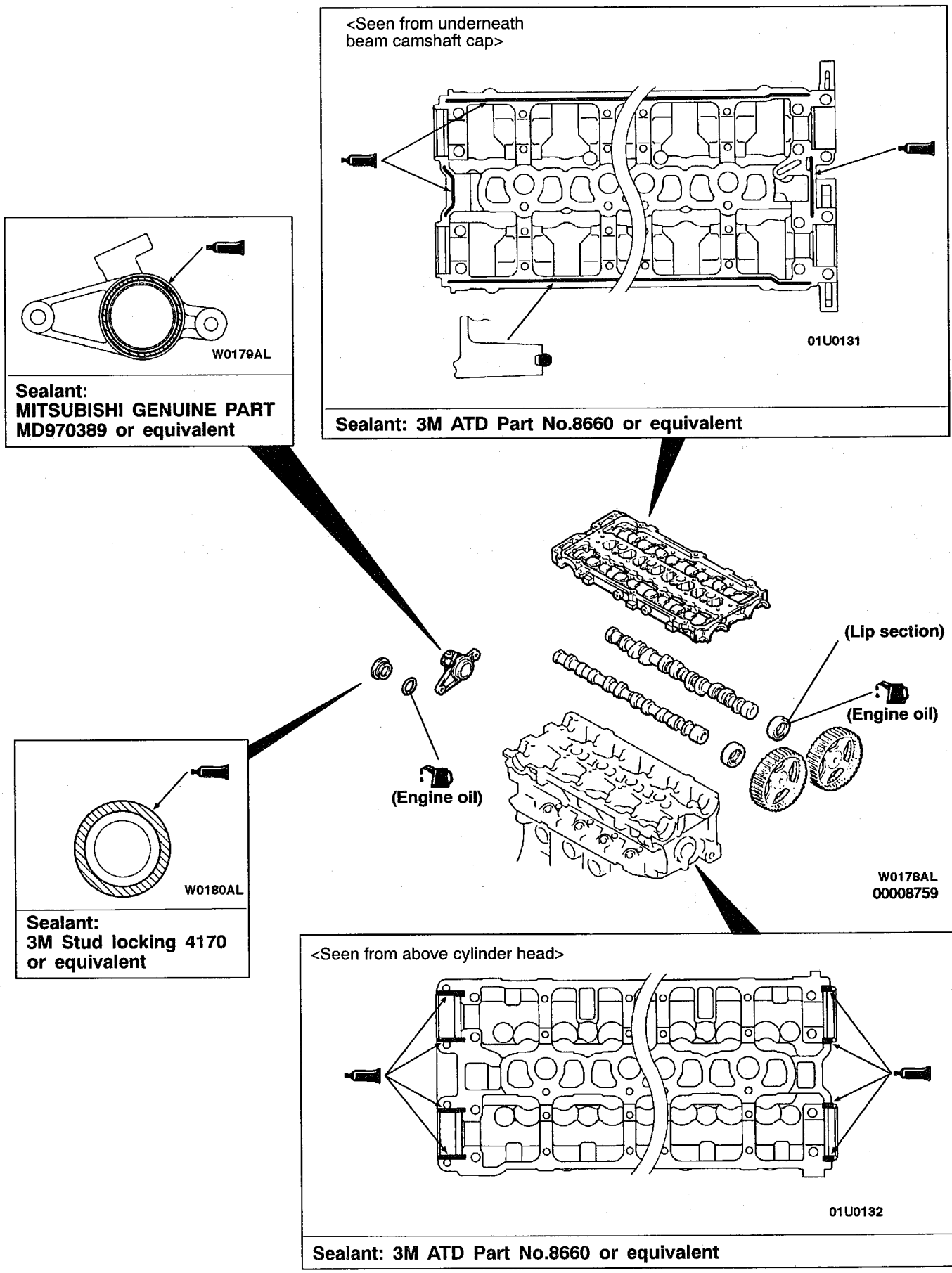

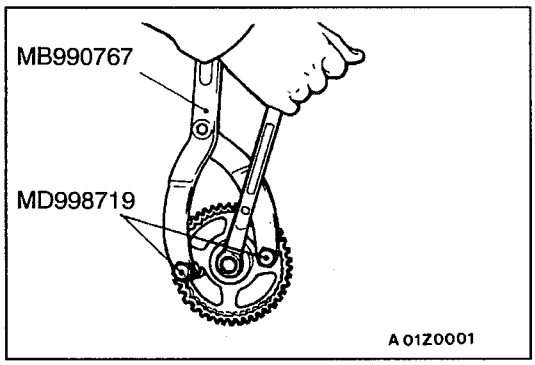


## REMOVAL SERVICE POINT

### ◀A▶ CAMSHAFT SPROCKET REMOVAL

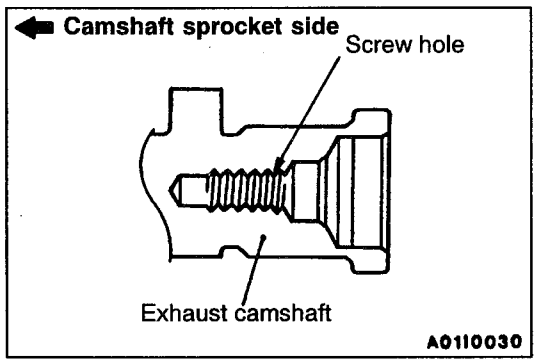


## INSTALLATION SERVICE POINTS

### ▶A◀ CAMSHAFT INSTALLATION

1. Apply engine oil to journals and cams of the camshafts.
2. Install the camshafts on the cylinder head.

**Caution**
**Be careful not to confuse the intake camshaft with the exhaust one. There is a screw hole for the cam position sensing cylinder mounting bolt on the exhaust-side camshaft.**

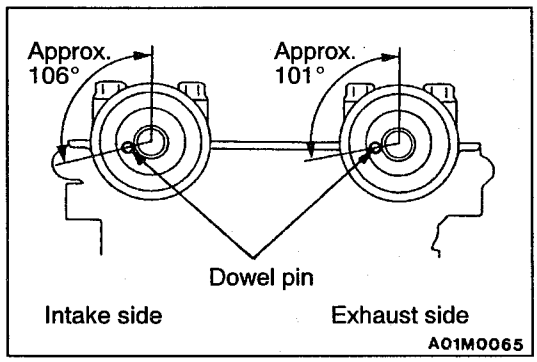


### ▶B◀ BEAM CAMSHAFT CAP INSTALLATION

1. Place the camshaft dowel pin as shown in the illustration.

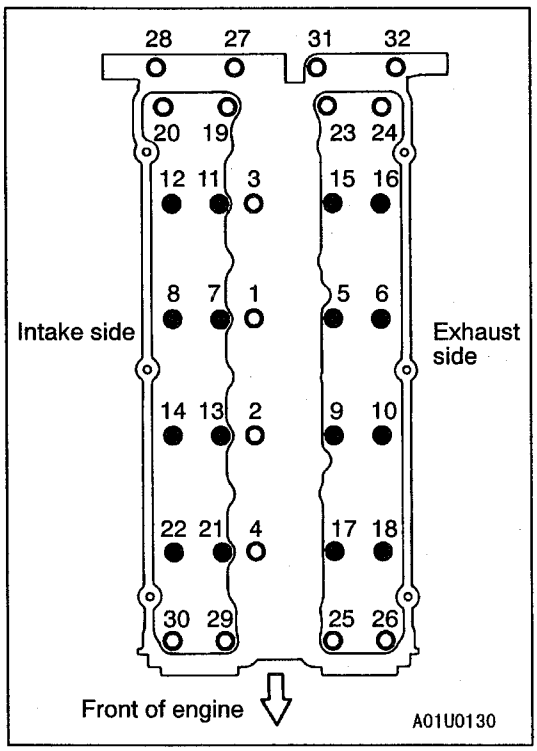


2. Tighten the beam camshaft cap mounting bolts to the specified torque in the order shown in the illustration.

**Tightening torque:**
**● : 10 – 12 Nm**
**○ : 21 – 25 Nm**

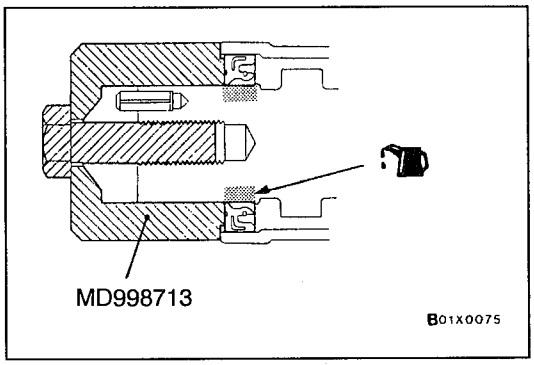


### ▶C◀ CAMSHAFT OIL SEAL INSTALLATION

1. Apply engine oil to the entire circumference of the oil seal lip.
2. Press-fit the oil seal as shown in the illustration.

### ▶D◀ CAMSHAFT SPROCKET INSTALLATION

Use the special tool to secure the camshaft sprocket in the same way as during removal, and then tighten the bolt to the specified torque.

**Tightening torque: 88 Nm**

# OIL PAN

## REMOVAL AND INSTALLATION

**Pre-removal and Post-installation Operation**
- Under Cover Removal and Installation
- Oil Level Gauge Removal and Installation
- Engine Oil Draining and Supplying (Refer to GROUP 12 – On-vehicle Service.)

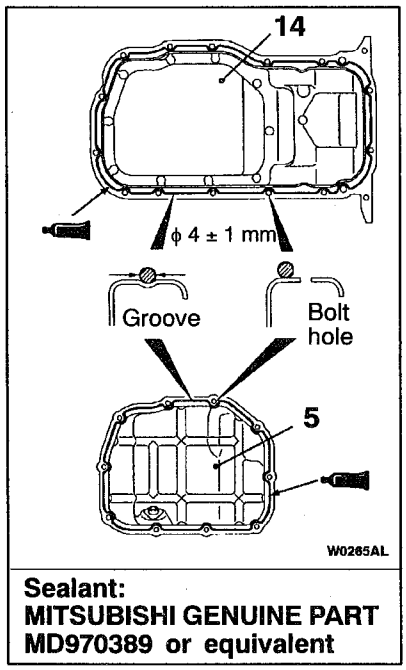


**Sealant:**
**MITSUBISHI GENUINE PART MD970389 or equivalent**




**Removal steps**

1. Splash shield
2. Power steering pressure hose clamp
3. Steering gear box and shaft connection
4. ◀A▶ Steering gear box installation bolt
5. ◀B▶ Lower oil pan
6. Drain plug
7. ▶A◀ Gasket
8. Oil screen
9. Gasket
10. Free-wheeling clutch engage switch connector connection
11. ◀C▶ Front differential mount center bolt
12. ◀C▶ Front differential mount
13. Bell housing cover
14. ◀D▶ Upper oil pan

## REMOVAL SERVICE POINTS

### ◀A▶ STEERING GEAR BOX INSTALLATION BOLT REMOVAL

Remove the steering gear box installation bolts and lower the steering gear box.

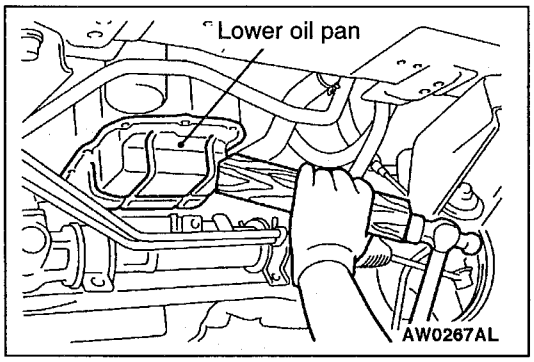


### ◀B▶ LOWER OIL PAN REMOVAL

Place a piece of wood against the lower oil pan, and tap the piece of wood with a hammer to remove the lower oil pan.

**Caution**
**Because the upper oil pan used is made from aluminium, the oil pan remover (MB998727) should not be used.**

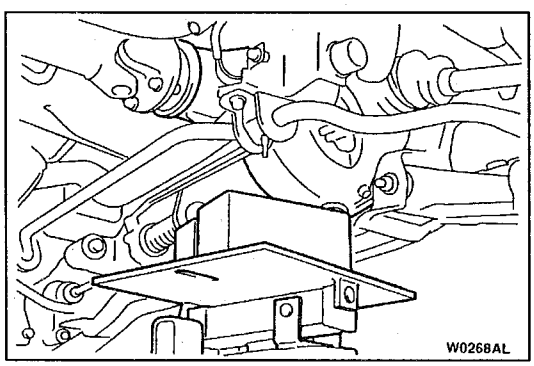


### ◀C▶ FRONT DIFFERENTIAL MOUNT CENTER BOLT/ FRONT DIFFERENTIAL MOUNT REMOVAL

1. Support the front differential by a jack, and remove the front differential mount center bolts and the front differential mount.
2. Remove the jack and lower the front differential.

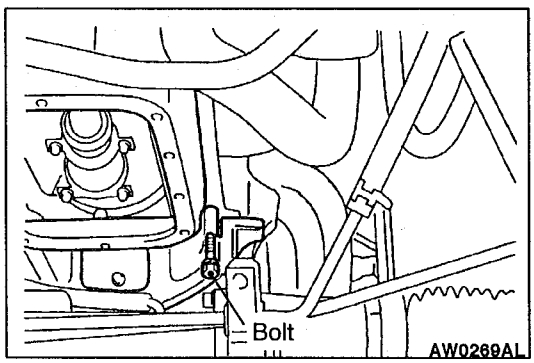


### ◀D▶ UPPER OIL PAN REMOVAL

After removing each installation bolts, install the upper oil pan installation bolts (M6×85) as shown, noting that one location is found on the right and left sides each, and turn them to remove the upper oil pan.

**Caution**
**Because the upper oil pan used is made from aluminium, the oil pan remover (MB998727) should not be used.**

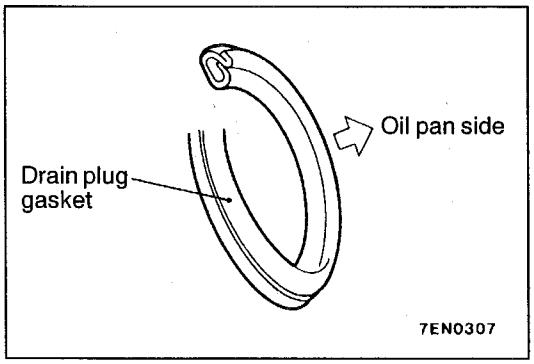


## INSTALLATION SERVICE POINT

### ▶A◀ DRAIN PLUG GASKET INSTALLATION

Install the drain plug gasket in the direction so that it faces as shown in the illustration.

# CRANKSHAFT OIL SEAL

## REMOVAL AND INSTALLATION

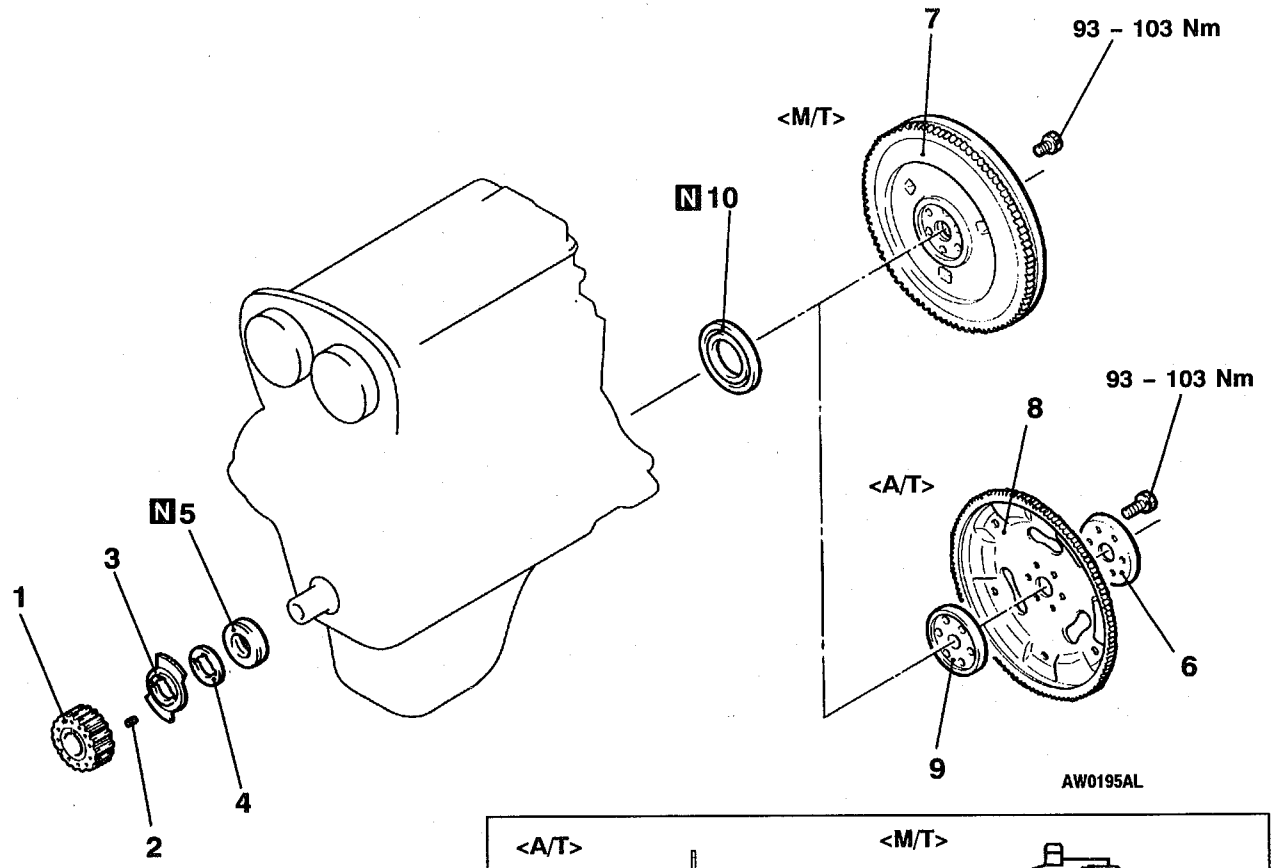


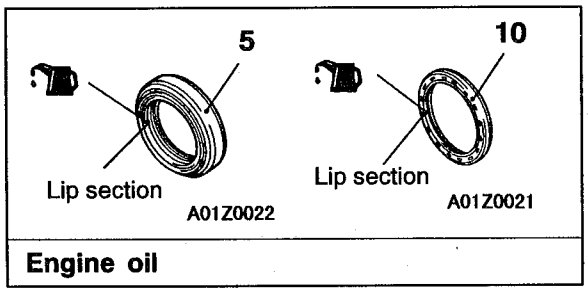


Engine oil

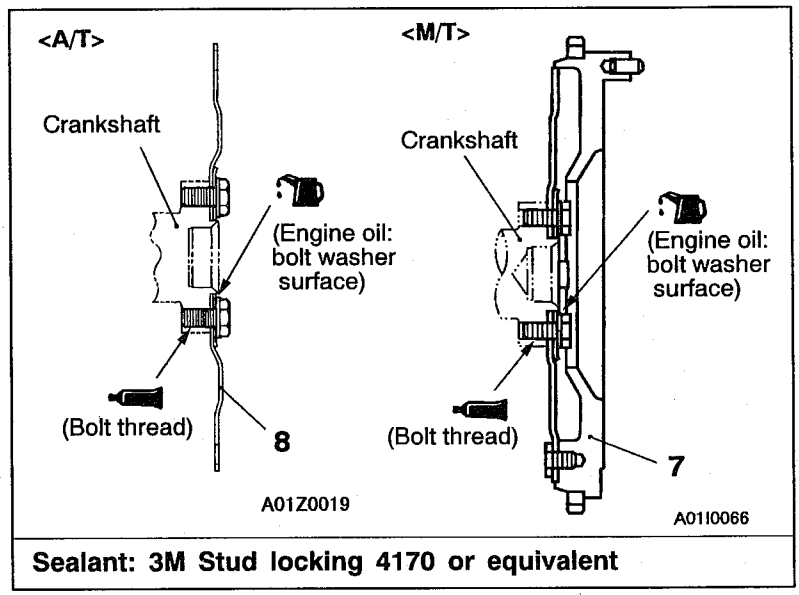


Sealant: 3M Stud locking 4170 or equivalent

**Crankshaft front oil seal removal steps**

- Timing belt (Refer to P.11A-29.)
- Crank angle sensor (Refer to GROUP 16.)

1. Crankshaft sprocket
2. Key
3. Crankshaft sensing blade
4. Crankshaft spacer

▶C◀ 5. Crankshaft front oil seal

**Crankshaft rear oil seal removal steps**

- Transmission assembly (M/T: Refer to GROUP 22.) (A/T: Refer to GROUP 23.)
- Clutch cover and disc <M/T>

◀A▶ ▶B◀ 6. Adapter plate <A/T>
◀A▶ ▶B◀ 7. Flywheel <M/T>
◀A▶ ▶B◀ 8. Drive plate <A/T>
◀A▶ ▶B◀ 9. Crankshaft adapter <A/T>
▶A◀ 10. Crankshaft rear oil seal

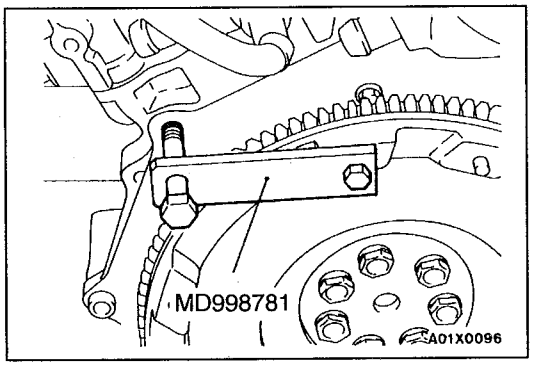


## REMOVAL SERVICE POINT

**◀A▶ ADAPTER PLATE<A/T>/FLYWHEEL <M/T>/DRIVE PLATE <A/T>/CRANKSHAFT ADAPTER <A/T> REMOVAL**

Use the special tool to secure the flywheel or drive plate, and remove the bolts.

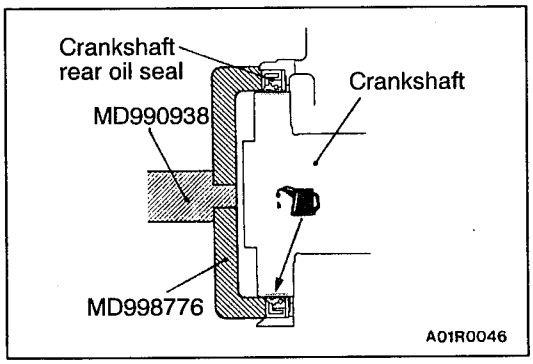


## INSTALLATION SERVICE POINTS

**▶A◀ CRANKSHAFT REAR OIL SEAL INSTALLATION**

1. Apply a small mount of engine oil to the entire circumference of the oil seal lip.
2. Install the oil seal by tapping it as far as the chamfered position of the oil seal case as shown in the illustration.

**▶A◀ CRANKSHAFT ADAPTER <A/T>/DRIVE PLATE <A/T>/FLYWHEEL <M/T>/ADAPTER PLATE<A/T> INSTALLATION**

1. Clean off all sealant, oil and other substances which are adhering to the threaded bolts, crankshaft thread holes and the drive plate.
2. Apply oil to the bearing surface of the drive plate bolts.
3. Apply oil to the crankshaft thread holes.
4. Apply sealant to the threaded mounting holes.

   **Specified sealant: 3M Stud locking 4170 or equivalent**
5. Use the special tool to hold the drive plate in the same manner as removal, and install the bolt.

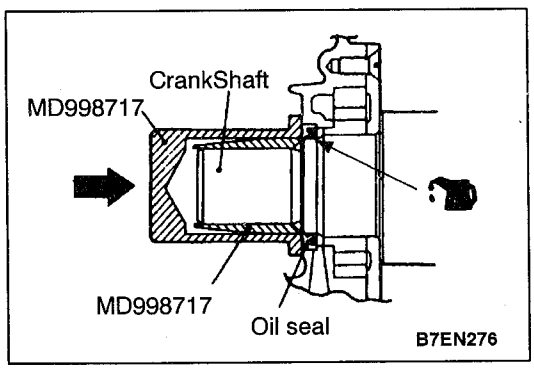


**▶C◀ CRANKSHAFT FRONT OIL SEAL INSTALLATION**

1. Apply a small amount of engine oil to the entire circumference of the oil seal lip.
2. Tap the oil seal unit it is flush with the oil seal case.

# CYLINDER HEAD GASKET

## REMOVAL AND INSTALLATION

**Pre-removal and Post-installation Operation**
- Fuel Discharge Prevention (Refer to GROUP 13A – On-vehicle Service.) <Pre-removal only>
- Engine Coolant Draining and Supplying (Refer to GROUP 14 – On-vehicle Service.)
- Engine Oil Draining and Supplying (Refer to GROUP 12 – On-vehicle Service.)
- Intake Manifold Removal and Installation (Refer to GROUP 15.)
- Fuel Pressure Regulator (High Pressure) and Fuel Pump (High Pressure) Removal and Installation (Refer to GROUP 13A.)
- Water Bypass Pipe Assembly Removal and Installation (Refer to GROUP 14 – Water Hose and Pipe.)
- Timing Belt Removal and Installation (Refer to P.11A-29.)

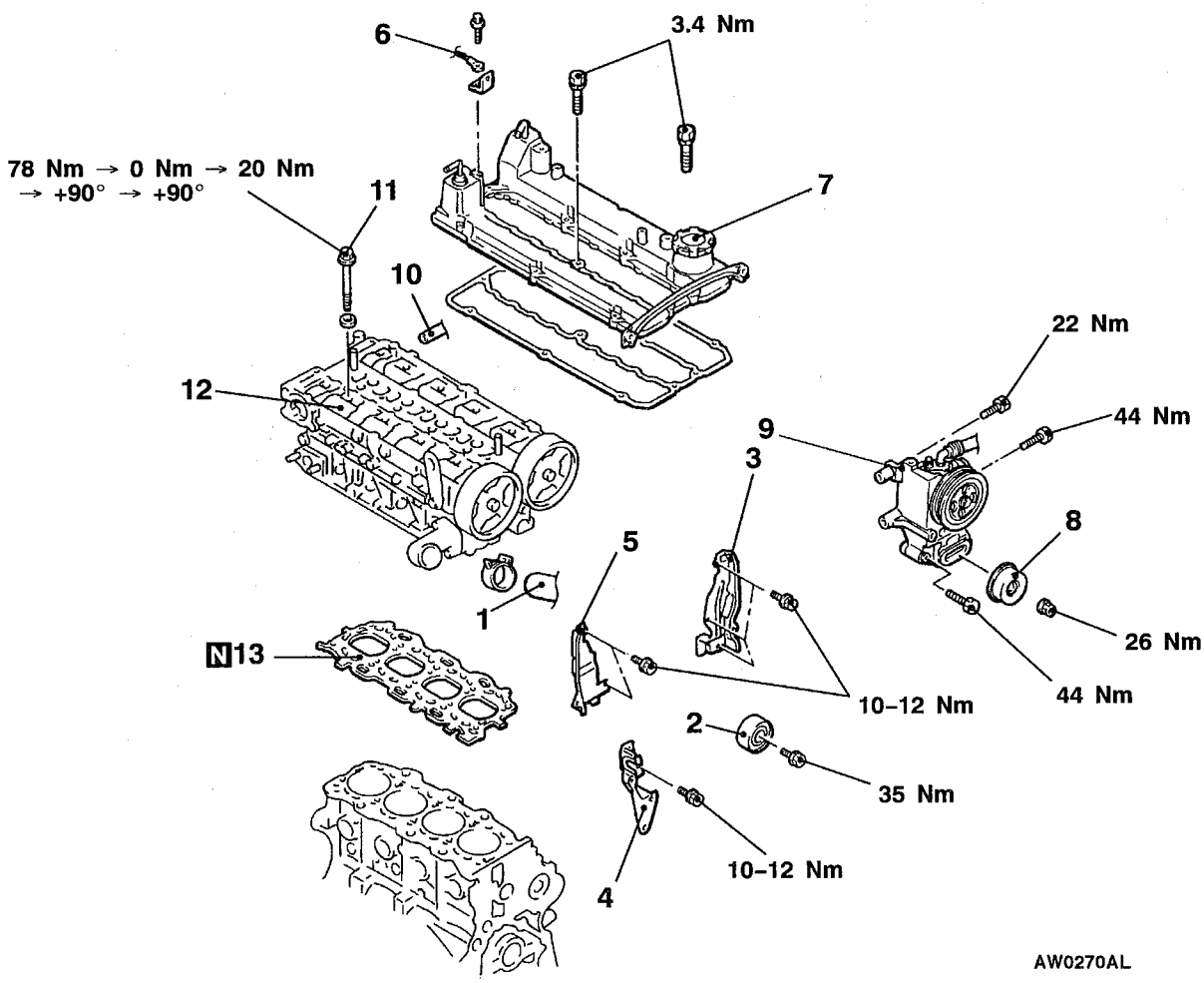


**Removal steps**

1. Radiator upper hose connection
2. Idler pulley
3. Timing belt rear cover, upper (LH)
4. Timing belt rear cover, lower (RH)
5. Timing belt rear cover, upper (RH)
6. Earth cable connection
7. Rocker cover assembly
8. Tension Pulley
9. Power steering oil pump and bracket assembly
10. Heater hose connection
11. Cylinder head bolt
12. Cylinder head assembly
13. Cylinder head gasket

◀A▶
◀B▶ ▶B◀
▶A◀

## REMOVAL SERVICE POINTS

### ◀A▶ POWER STEERING OIL PUMP AND BRACKET ASSEMBLY REMOVAL

Remove the power steering oil pump and bracket assembly from the engine with the hose attached.

NOTE
Place the removed power steering oil pomp and bracket assembly in a place where it will not be a hindrance when removing and installing the cylinder head assembly, and tie it with a cord.

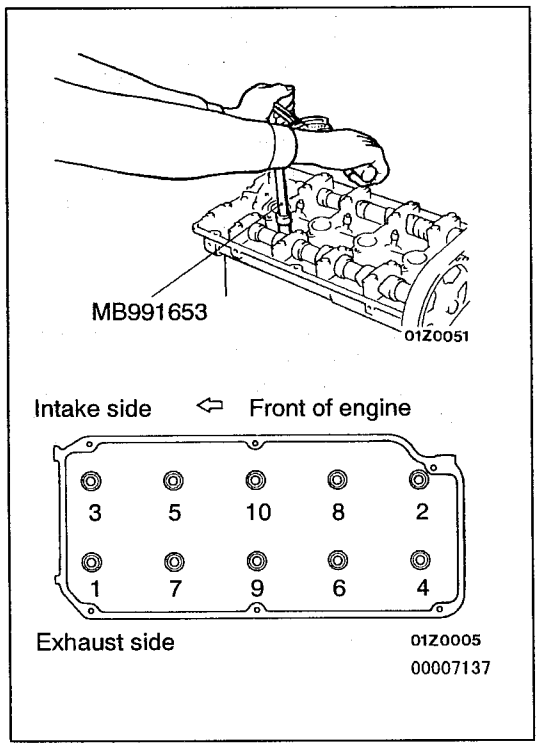


### ◀B▶ CYLINDER HEAD BOLT REMOVAL

Use the special tool to loosen the bolts in two or three steps in the order of the numbers shown in the illustration, and then remove the bolts.

## INSTALLATION SERVICE POINTS

### ▶A◀ CYLINDER HEAD GASKET INSTALLATION

1. Wipe off all oil and grease from the gasket mounting surface.
2. Install so that the shapes of the cylinder head holes match the shapes of the respective cylinder head gasket holes.

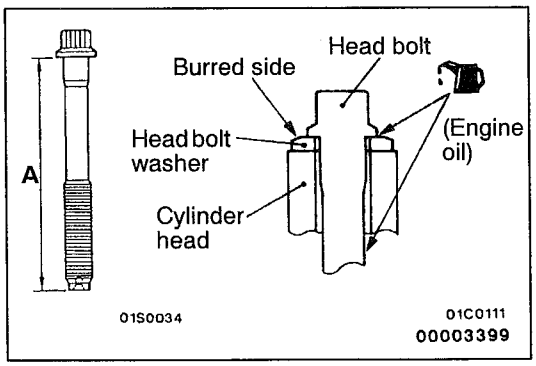


### ▶B◀ CYLINDER HEAD BOLT INSTALLATION

1. When installing the cylinder head bolts, the length below the head of the bolts should be within the limit.
   If it is outside the limit, replace the bolts.
   **Limit (A): 96.4 mm**
2. The head bolt washer should be installed with the burred side caused by tapping out facing upwards.
3. Apply a small amount of engine oil to the thread section and the washer of the cylinder head bolt.

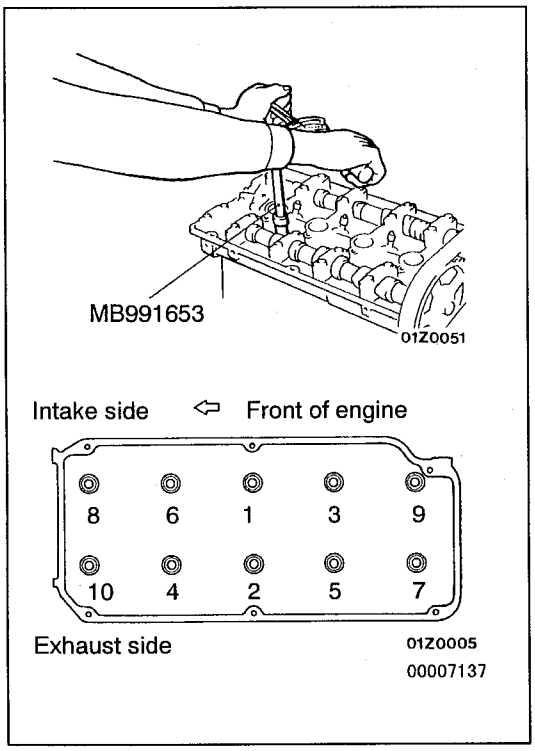


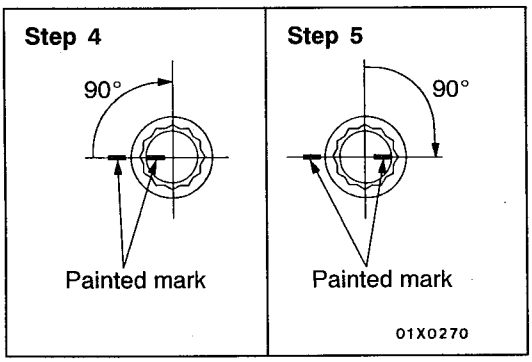


4. Tighten the bolts by the following procedure.

| Step | Operation | Remarks |
|---|---|---|
| 1 | Tighten to 74 Nm. | Carry out in the order shown in the illustration. |
| 2 | Fully loosen. | Carry out in the reverse order of that shown in the illustration. |
| 3 | Tighten to 20 Nm. | Carry out in the order shown in the illustration. |
| 4 | Tighten 90° of a turn. | In the order shown in the illustration. Mark the head of the cylinder head bolt and cylinder head by paint. |
| 5 | Tighten 90° of a turn. | In the order shown in the illustration. Check that the painted mark of the head bolt is lined up with that of the cylinder head. |

**Caution**

1. **Always make a tightening angle just 90°. If it is less than 90°, the head bolt will be loosened.**
2. **If it is more than 90°, remove the head bolt and repeat the procedure from step 1.**

# TIMING BELT

## REMOVAL AND INSTALLATION

**Pre-removal and Post-installation Operation**
- Engine Cover Removal and Installation
- Air Intake Duct Removal and Installation (Refer to GROUP 15 – Air Cleaner and Resonance Tank.)
- Crankshaft Pulley Removal and Installation (Refer to P.11A-17.)

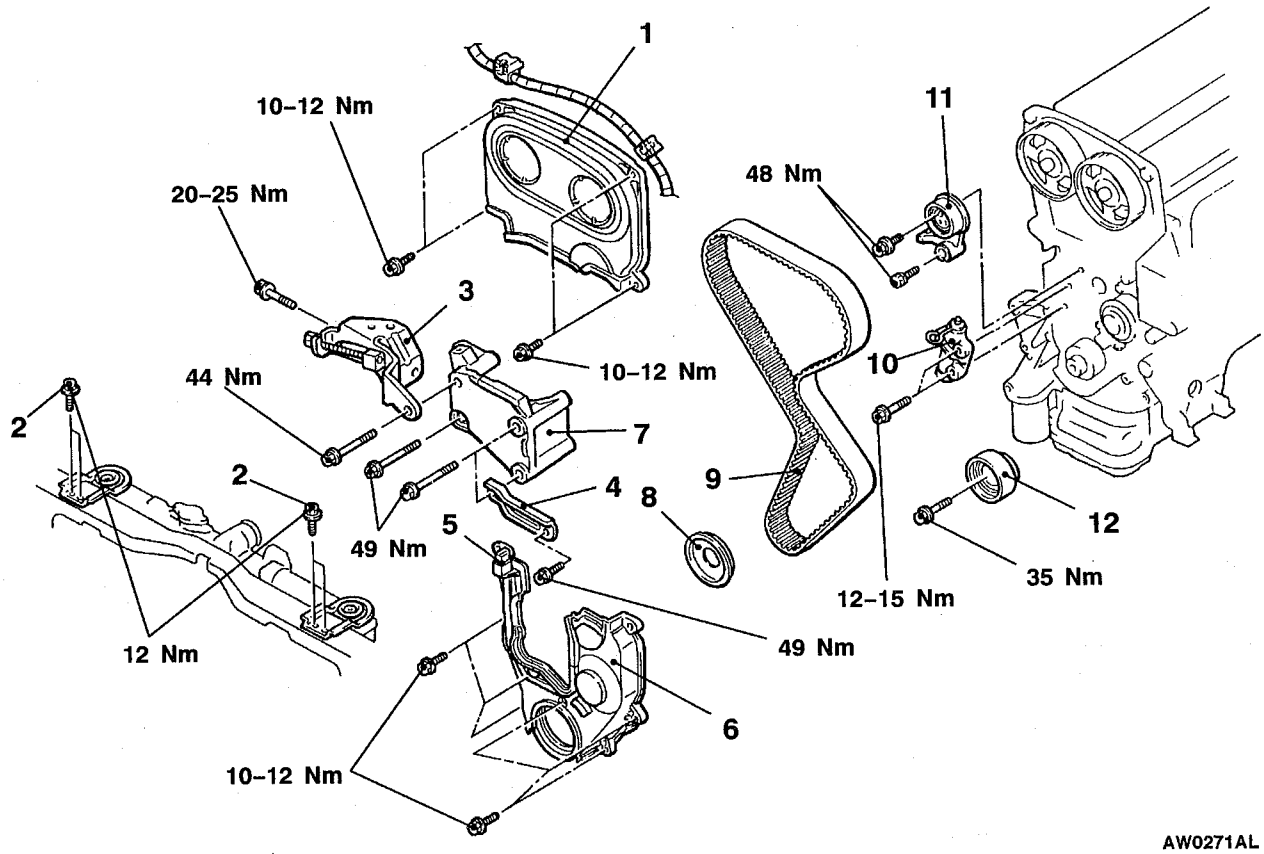


**Removal steps**

1. Timing belt front upper cover
2. Radiator upper installation bolts
3. Alternator brace
4. Power steering oil pump bracket stay
5. Crank angle sensor connector
6. Timing belt front lower cover
7. Accessory mount
8. Front flange

◀A▶ ▶C◀ • Timing belt tension adjustment
▶B◀ 9. Timing belt
▶A◀ 10. Auto tensioner
11. Tensioner pulley and arm assembly
12. Idler pulley

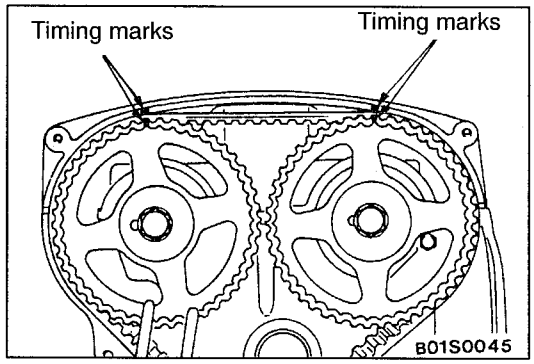


## REMOVAL SERVICE POINT

### ◀A▶ TIMING BELT REMOVAL

1. Turn the crankshaft clockwise to align each timing mark.

   **Caution**
   **The crankshaft must always be turned clockwise.**

2. Loosen the tensioner pulley center bolt and remove the timing belt.

   **Caution**
   **If the timing belt is to be re-used, use chalk to mark (on its flat side) an arrow indicating the clockwise direction.**

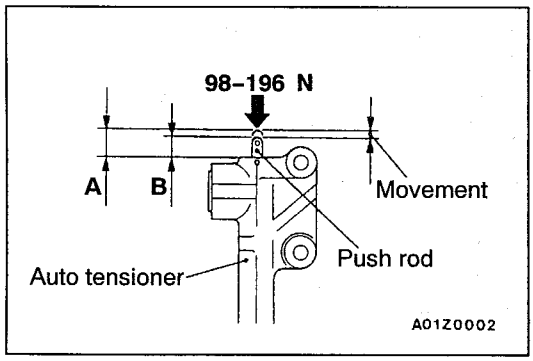


## INSTALLATION SERVICE POINTS

### ▶A◀ AUTO TENSIONER INSTALLATION

1. Apply 98–196 N force to the push rod of the auto tensioner by pressing it against a metal (cylinder block, etc.), and measure the movement of the push rod.

   **Standard value:**
   **Within 1 mm**
   **A: Length when it is free (not pressed)**
   **B: Length when it is pressed**
   **A – B: Movement**

2. If it is out of the standard value, change the auto tensioner.
3. Use a press or vice to gently compress the auto tensioner push rod until pin hole A of the push rod and pin hole B of the tensioner cylinder are aligned.

   **Caution**
   **If the compression speed is too fast, the push rod may become damaged, so be sure to carry out this operation slowly.**

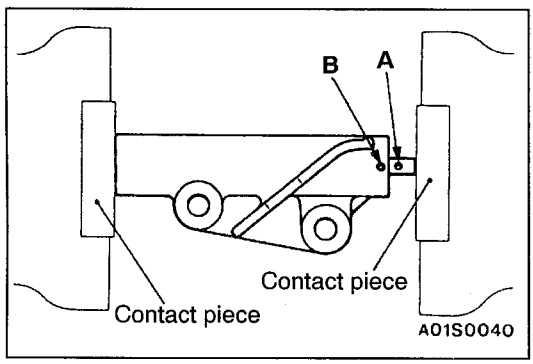


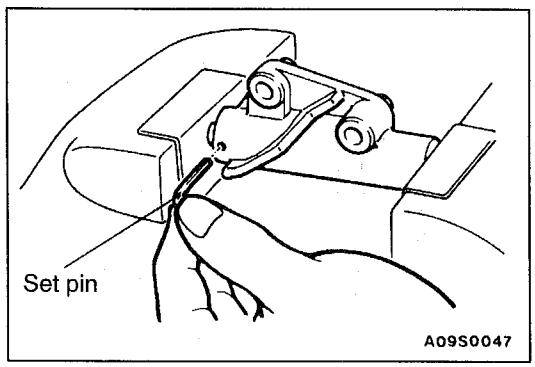


4. Once the holes are aligned, insert the set pin.

   NOTE
   When replacing the auto tensioner with a new part, the pin will be in the auto tensioner.

5. Install the auto tensioner to the engine.

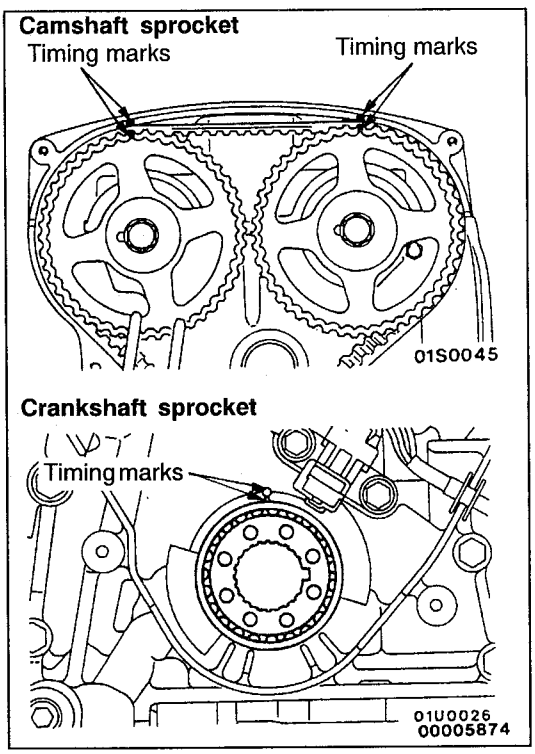


## ▶B◀ TIMING BELT INSTALLATION

1. Align the timing marks of each camshaft sprocket and the crankshaft sprocket.
2. Loosen the tensioner pulley center bolt.
3. Move the crankshaft sprocket half a tooth width in the anti-clockwise direction.

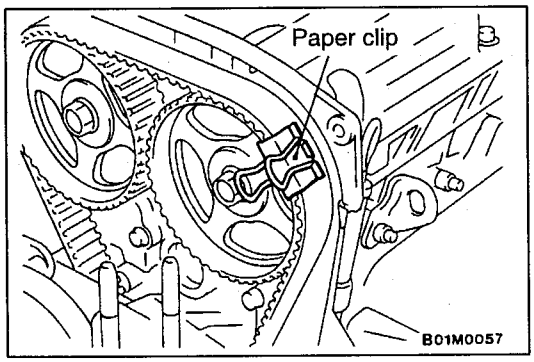


4. Place the timing belt on the exhaust-side camshaft sprocket, and hold it in the position shown in the illustration with a paper clip.

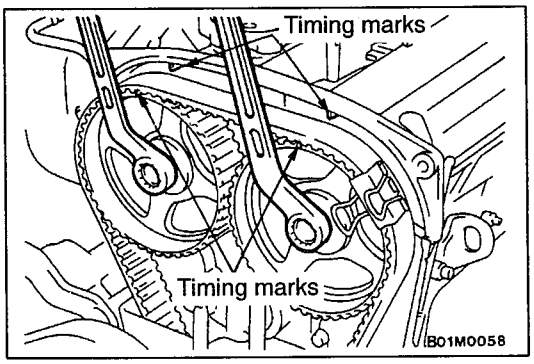


5. Place the timing belt on the intake-side sprocket while using two wrenches to align the timing marks.

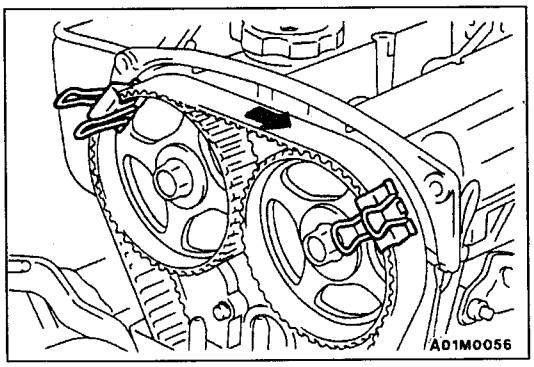


6. Hold the belt in the position shown in the illustration with another paper clip.

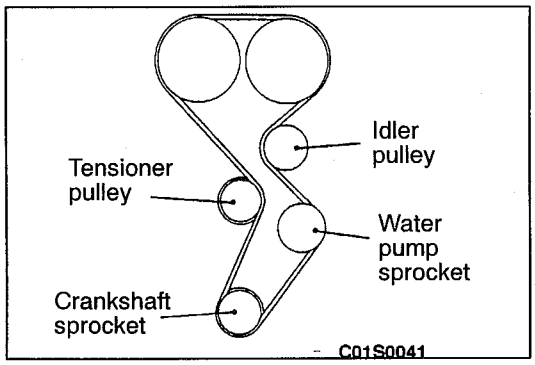


7. Place the belt onto the idler pulley, water pump sprocket, crankshaft sprocket and tensioner pulley in that order.
8. Remove the two paper clips.

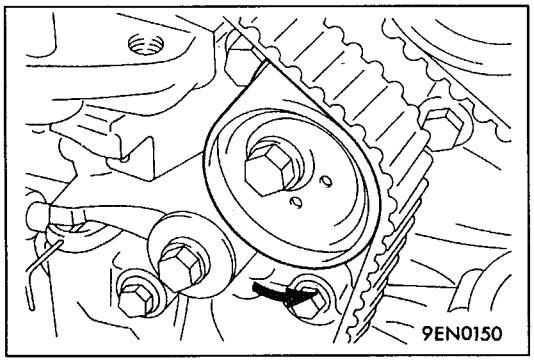


9. Lift the tensioner pulley in the direction of the arrow and tighten the tensioner pulley bolt.
10. Check to be sure that all timing marks are aligned.
11. Adjust the timing belt tension.

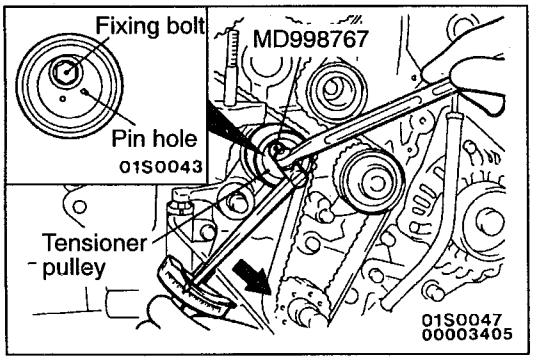


**▶C◀ TIMING BELT TENSION ADJUSTMENT**

1. After turning the crankshaft a 1/4 turn anti-clockwise, turn it clockwise to the position where the timing marks are aligned.
2. Loosen the fixing bolt of the tensioner pulley and using the special tool and a torque wrench, apply tension to the timing belt; then tighten the fixing bolt at the specified torque.

**Standard Value:**
**2.5 – 4.0 Nm [timing belt tension torque (reference value)]**

**Caution**
**When tightening the fixing bolt, ensure that the tensioner pulley shaft doesn't rotate with the bolt.**

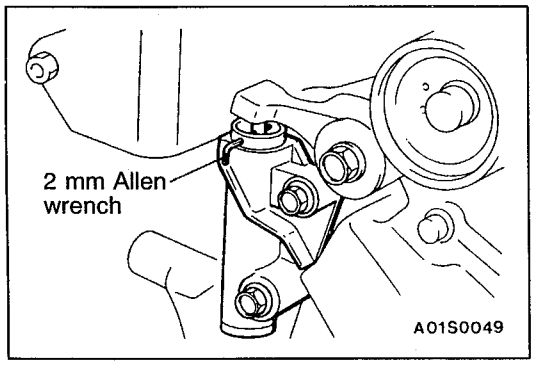


3. Take out the 2 mm Allen wrench from the auto tensioner. At this time, check to be sure that 2 mm Allen wrench can be pulled out easily.
Turn the crankshaft clockwise 2 turns, and after leaving it in this position for 5 minutes or more, check again to be sure that the auto tensioner 2 mm Allen wrench can be pulled out or inserted easily.

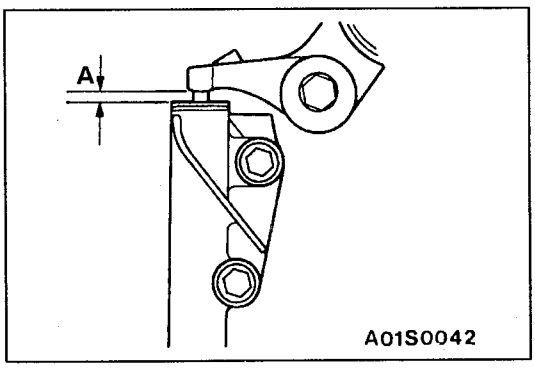


NOTE
Even if the 2 mm Allen wrench cannot be easily inserted, then it is satisfactory if the amount of protrusion of the auto tensioner rod is within the standard value.

**Standard value (A): 3.8 – 4.5 mm**

If it is outside the standard value, repeat the operations in steps 1 to 4.

4. Check to be sure that the timing marks on all sprockets are aligned.

# ENGINE ASSEMBLY

## REMOVAL AND INSTALLATION

**Caution**
**Mounting locations marked by * should be provisionally tightened, and then fully tightened after placing the vehicle horizontally and loading the full weight of the engine on the vehicle body.**

**Pre-removal and Post-installation Operation**
- Fuel Discharge Prevention (Refer to GROUP 13A – On-vehicle Service.) <Pre-removal only>
- Engine Coolant Draining and Supplying (Refer to GROUP 14 – On-vehicle Service.)
- Engine Oil Draining and Supplying (Refer to GROUP 12 – On-vehicle Service.)
- Hood Removal and Installation (Refer to GROUP 42.)
- Radiator Assembly Removal and Installation (Refer to GROUP 14.)
- Air Cleaner and Resonance Tank Removal and Installation (Refer to GROUP 15.)
- Transmission Assembly Removal and Installation (Refer to GROUP 23.)
- Drive Belt Tension Adjustment (Refer to P.11A-7.) <Post-installation only>

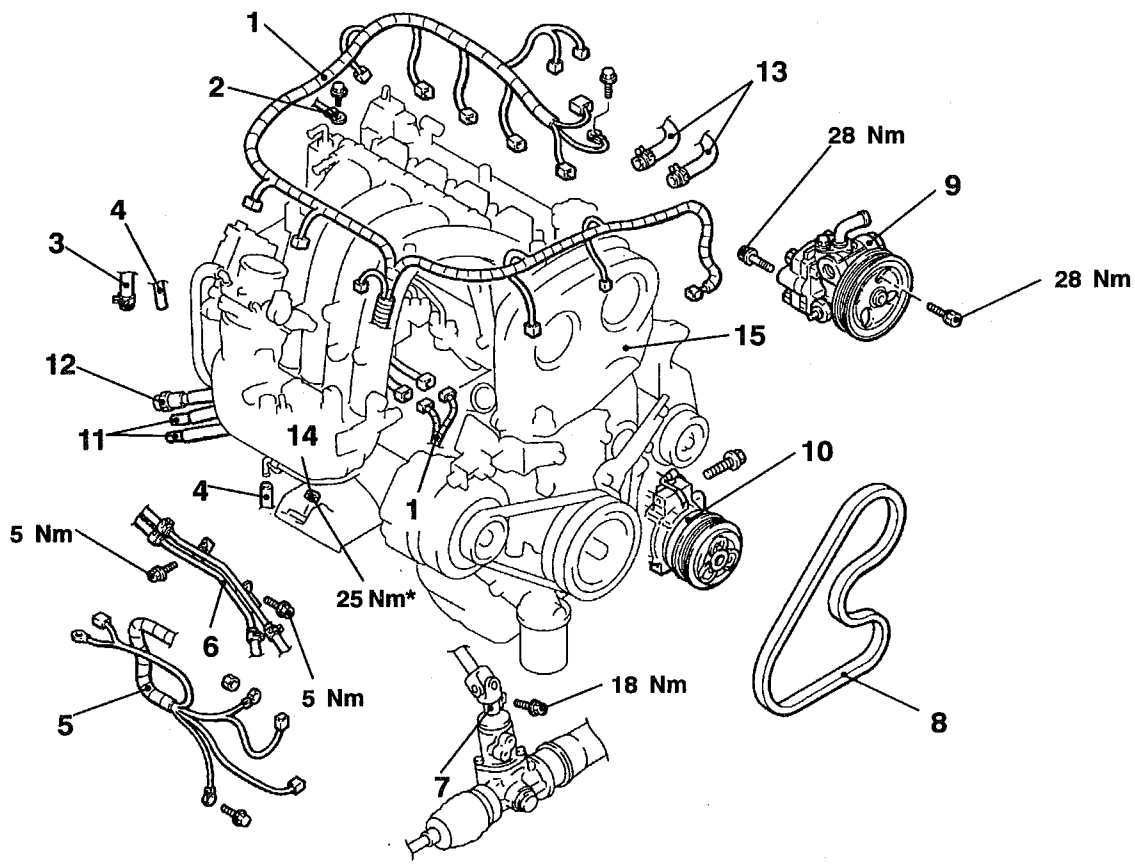


**Removal steps**
1. Engine harness connector
2. Earth cable connection
3. Brake booster vacuum hose connection
4. Vacuum hose connection
5. Battery cable connection
6. A/T fluid pipe clamp
7. Steering gear box and shaft connection

◀A▶ ◀B▶
◀C▶ ▶A◀

8. Drive belt
9. Power steering oil pump
10. A/C compressor
11. Fuel return hose connection
12. Fuel pressure hose connection
13. Heater hose connection
14. Engine mount installation nut
15. Engine assembly

## REMOVAL SERVICE POINTS

### ◀A▶ POWER STEERING OIL PUMP REMOVAL

Remove the power steering oil pump from the engine with the hose attached.

NOTE
Place the removed power steering oil pump where it will not be a hindrance when removing and installing the engine assembly, and tie it with a cord.

### ◀B▶ A/C COMPRESSOR REMOVAL

Disconnect the A/C compressor connector and remove the compressor from the compressor bracket with the hose still attached.

NOTE
Place the removed A/C compressor where it will not be a hindrance when removing and installing the engine assembly, and tie it with a cord.

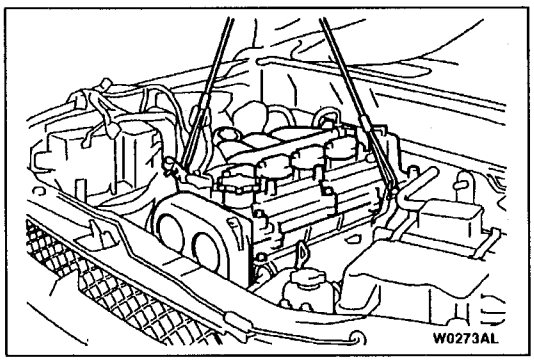


### ◀D▶ ENGINE ASSEMBLY REMOVAL

1. Check that all cables, hoses and harness connectors, etc. are disconnected from the engine.
2. Lift the chain block slowly to remove the engine assembly upward from the engine compartment.

## INSTALLATION SERVICE POINT

### ▶A◀ ENGINE ASSEMBLY INSTALLATION

Install the engine assembly, checking that the cables, hoses, and harness connectors are not clamped.

NOTES

# ENGINE
# <4G1-MPI>

## CONTENTS


**GENERAL INFORMATION ..... 2**

**SERVICE SPECIFICATIONS ..... 2**

**SEALANTS ..... 3**

**SPECIAL TOOLS ..... 3**

**ON-VEHICLE SERVICE ..... 5**

- Drive Belt Tension Check and Adjustment ..... 5
- Valve Clearance Check and Adjustment ..... 8
- Ignition Timing Check ..... 9
- Idle Speed Check <Vehicles with catalytic converter> ..... 9
- Idle Mixture Check <Vehicles with catalytic converter> ..... 10
- Idle Speed and Mixture Check and Adjustment <Vehicles without catalytic converter> ..... 11
- Compression Pressure Check ..... 12
- Manifold Vacuum Check ..... 13
- Timing Belt Tension Adjustment ..... 13

**CRANKSHAFT PULLEY ..... 14**

**CAMSHAFT AND CAMSHAFT OIL SEAL ... 15**

**OIL PAN ..... 18**

**CRANKSHAFT OIL SEAL ..... 21**

**CYLINDER HEAD GASKET ..... 23**

**TIMING BELT ..... 28**

**ENGINE ASSEMBLY ..... 31**

# GENERAL INFORMATION

| Items | | | Specification |
|---|---|---|---|
| Total displacement mℓ | | | 1,584 |
| Bore × Stroke mm | | | 76.0 × 87.3 |
| Compression ratio | | | 9.5 |
| Combustion chamber | | | Pentroof type |
| Camshaft arrangement | | | SOHC |
| Number of valve | Intake | | 8 |
| | Exhaust | | 8 |
| Valve timing | Intake | Opening | BTDC 17° |
| | | Closing | ABDC 39° |
| | Exhaust | Opening | BBDC 49° |
| | | Closing | ATDC 7° |
| Fuel system | | | Electronically controlled multipoint fuel injection |
| Rocker arm | | | Roller type |
| Auto-lash adjuster | | | Not equipped |

# SERVICE SPECIFICATIONS

| Item | | Standard value | Limit |
|---|---|---|---|
| Alternator drive belt tension (When checked) | Vibration frequency Hz | 144 – 176 | – |
| | Tension N | 392 – 588 | – |
| | Deflection (Reference value) mm | 8.7 – 11.4 | – |
| Alternator drive belt tension (When adjusted) | Vibration frequency Hz | 153 – 169 | – |
| | Tension N | 441 – 539 | – |
| | Deflection (Reference value) mm | 9.2 – 10.6 | – |
| Alternator drive belt tension (When replaced) | Vibration frequency Hz | 183 – 210 | – |
| | Tension N | 637 – 833 | – |
| | Deflection (Reference value) mm | 6.6 – 8.3 | – |
| Power steering oil pump and A/C compressor drive belt tension (When checked) | Vibration frequency Hz | 123 – 151 | – |
| | Tension N | 392 – 588 | – |
| | Deflection (Reference value) mm | 10.2 – 13.4 | – |

| Item | | Standard value | Limit |
|---|---|---|---|
| Power steering oil pump and A/C compressor drive belt tension (When adjusted) | Vibration frequency Hz | 131 – 145 | – |
| | Tension N | 441 – 539 | – |
| | Deflection (Reference value) mm | 10.9 – 12.5 | – |
| Power steering oil pump and A/C compressor drive belt tension (When replaced) | Vibration frequency Hz | 157 – 187 | – |
| | Tension N | 637 – 833 | – |
| | Deflection (Reference value) mm | 7.6 – 9.6 | – |
| Valve clearance (at hot) mm | Intake valve | 0.25 | – |
| | Exhaust valve | 0.30 | – |
| Basic ignition timing | | 5°BTDC ± 3° | – |
| Idle speed r/min | | 750 ± 100 | – |
| CO contents % | Vehicles with catalytic converter | 0.5 or less | – |
| | Vehicles without catalytic converter | 1.5 ± 0.5 | – |
| Compression pressure (300 r/min) kPa | | 1628 | Min. 1185 |
| Compression pressure difference of all cylinder kPa | | – | Max. 100 |
| Intake manifold vacuum kPa | | – | Min. 60 |
| Cylinder head bolt shank length mm | | – | 103.2 |

# SEALANTS

| Items | Specified sealants | Remarks |
|---|---|---|
| Oil pan | MITSUBISHI GENUINE PART MD970389 or equivalent | Semi-drying sealant |
| Flywheel bolt <M/T> or drive plate bolt <A/T> | 3M ATD Part No.8660 or equivalent | Semi-drying sealant |

# SPECIAL TOOLS

| Tool | Number | Name | Use |
|---|---|---|---|
| 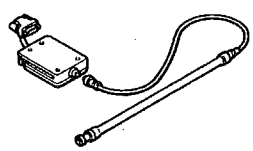 | MB991668 | Belt tension meter set | Drive belt tension measurement (used together with MUT-II) |
| 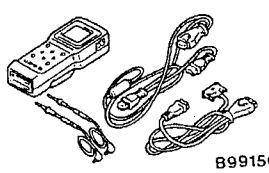 B991502 | MB991502 | MUT-II sub assembly | • Engine idle speed check<br>• Basic ignition timing check<br>• Drive belt tension measurement |

| Tool | Number | Name | Use |
|---|---|---|---|
| 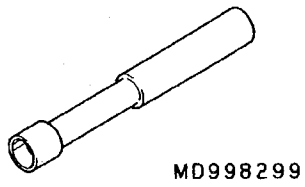 | MD998299 | MAS screwdriver | Idle speed and mixture check and adjustment |
|  | MD998747 | Crankshaft pulley holder | Holding the crankshaft pulley |
| 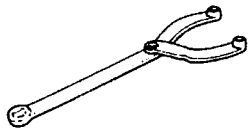 | MB990767 | End yoke holder | Holding the camshaft sprocket |
| 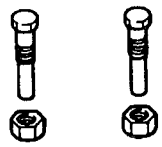 | MD998719 or MD998754 | Crankshaft pulley holder pin | |
| 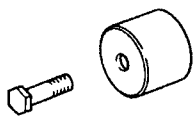 | MD998713 | Camshaft oil seal installer | Press-in of the camshaft oil seal |
| 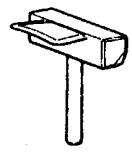 | MD998727 | Oil pan remover | Removal of oil pan |
| 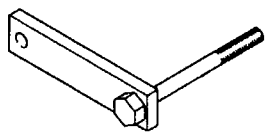 | MD998781 | Flywheel stopper | Securing the flywheel <M/T> or drive plate <A/T> |
| 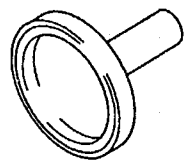 | MD998718 | Crankshaft rear oil seal installer | Pressing-in of the crankshaft rear oil seal |
| 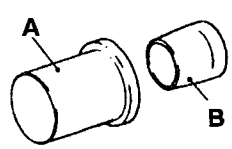 | A: MD998304<br>B: MD998305 | A: Crankshaft front oil seal installer<br>B: Crankshaft front oil seal guide | Pressing-in of the crankshaft rear oil seal |

| Tool | Number | Name | Use |
|---|---|---|---|
| 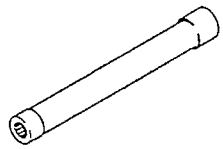 | MB991653 | Cylinder head bolt wrench | Removal and installation of the cylinder head bolt |

# ON-VEHICLE SERVICE

## DRIVE BELT TENSION CHECK AND ADJUSTMENT

### ALTERNATOR DRIVE BELT TENSION CHECK

Check the drive belt tension by the following procedure.

**Standard value:**

| | |
|---|---|
| Vibration frequency Hz | 144 – 176 |
| Tension N | 392 – 588 |
| Deflection (Reference value) mm | 8.7 – 11.4 |

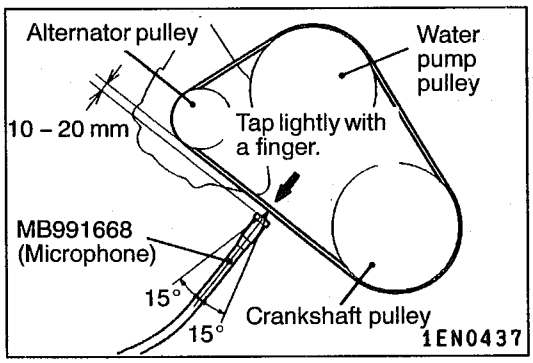


**<When using the MUT-II>**

(1) Connect the special tool (MB991668) to the MUT-II.
(2) Connect the MUT-II to the diagnosis connector.
(3) Turn the ignition switch to ON and select "Belt Tension Measurement" from the menu screen.
(4) Hold the microphone to the middle of the drive belt between the pulleys (at the place indicated by the arrow), about 10 – 20 mm away from the rear surface of the belt and so that it is perpendicular to the belt (within an angle of ± 15°).
(5) Gently tap the middle of the belt between the pulleys (the place indicated by the arrow) with your finger as shown in the illustration, and check that the vibration frequency of the belt is within the standard value.

**Caution**

**1) The temperature of the surface of the belt should be as close to normal temperature as possible.**
**2) Do not allow any contaminants such as water or oil to get onto the microphone.**
**3) If strong gusts of wind blow against the microphone or if there are any loud sources of noise nearby, the values measured by the microphone may not correspond to actual values.**
**4) If the microphone is touching the belt while the measurement is being made, the values measured by the microphone may not correspond to actual values.**
**5) Do not take the measurement while the vehicle's engine is running.**

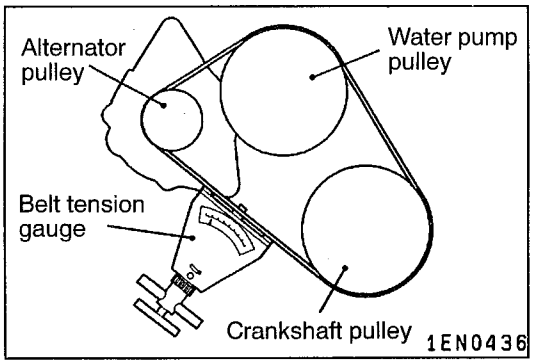


**<When using a tension gauge>**

Use a belt tension gauge to check that the belt tension is within the standard value.

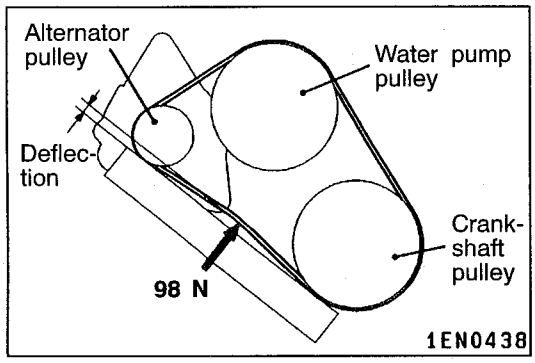


**<Belt deflection check>**

Apply 98 N of force to the middle of the drive belt between the pulleys (at the place indicated by the arrow) and check that the amount of deflection is within the standard value.

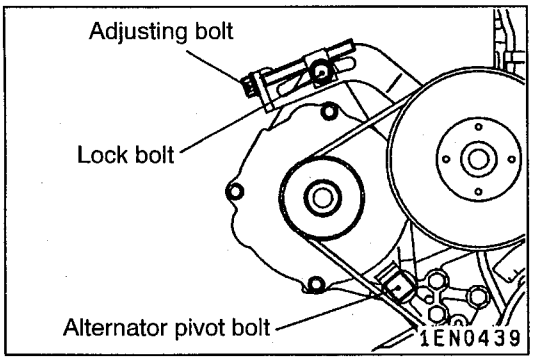


## ALTERNATOR DRIVE BELT TENSION ADJUSTMENT

1. Loosen the nut of the alternator pivot bolt.
2. Loosen the lock bolt.
3. Use the adjusting bolt to adjust the belt tension and belt deflection to the standard values.

   **Standard value:**

| Items | When adjusted | When replaced |
|---|---|---|
| Vibration frequency Hz | 153 – 169 | 183 – 210 |
| Tension N | 441 – 539 | 637 – 833 |
| Deflection (Reference value) mm | 9.2 – 10.6 | 6.6 – 8.3 |

4. Tighten the nut of the alternator pivot bolt.

   **Tightening torque: 44 Nm**
5. Tighten the lock bolt.

   **Tightening torque: 22 Nm**
6. Tighten the adjusting bolt.

   **Tightening torque: 5 Nm**

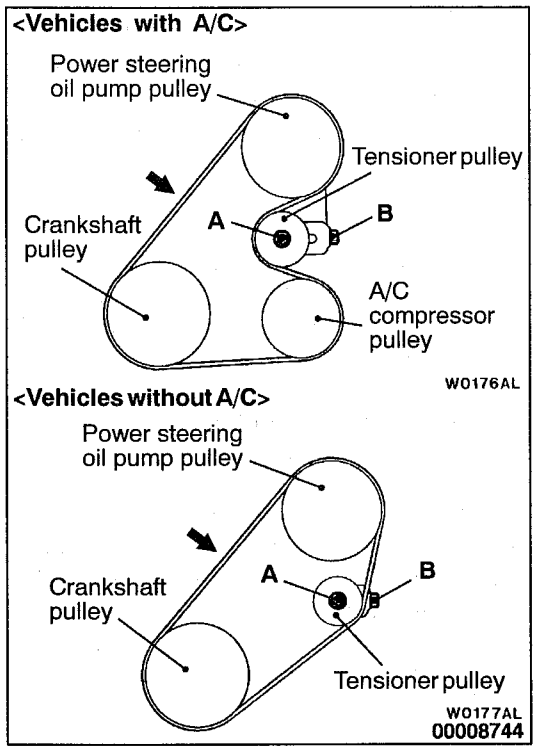


## POWER STEERING OIL PUMP AND AIR CONDITIONER COMPRESSOR DRIVE BELT TENSION CHECK AND ADJUSTMENT

1. Check if the belt tension is within the standard value using one of the methods below.

**Standard value:**

| Items | When checked | When adjusted | When replaced |
|---|---|---|---|
| Vibration frequency Hz | 123 – 151 | 131 – 145 | 157 – 187 |
| Tension N | 392 – 588 | 441 – 539 | 637 – 833 |
| Deflection (Reference value) mm | 10.2 – 13.4 | 10.9 – 12.5 | 7.6 – 9.6 |

**<When measuring the vibration frequency>**

With your finger tip lightly tap the centre of the belt between the pulleys in the location shown by the arrow in the illustration and then measure the belt vibration frequency.

NOTE
Refer to P.11B-5 for information regarding the vibration frequency measurement method using MUT-II.

**<When measuring the tension>**

Use a belt tension gauge to measure the belt tension.

**<When measuring the deflection>**

Apply 98 N of pressure against the location between the pulleys shown by the arrow in the illustration and then measure the deflection.

2. If the tension or deflection is outside the standard value, adjust by the following procedure.
   (1) Loosen tensioner pulley fixing nut A.
   (2) Adjust the amount of belt deflection using adjusting bolt B.
   (3) Tighten fixing nut A.

   **Tightening torque: 25 Nm**

   (4) Check the belt deflection amount and tension, and readjust if necessary.

   **Caution**
   **Check after turning the crankshaft once or more clockwise (right turn).**

## VALVE CLEARANCE CHECK AND ADJUSTMENT

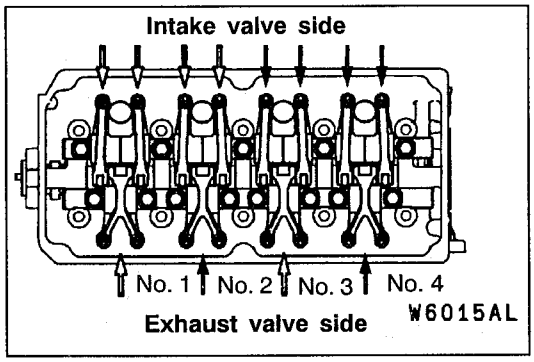


1. Start the engine and allow it to warm up until the engine coolant temperature reaches 80 to 95°C.
2. Remove all spark plugs from the cylinder head for easy inspection.
3. Remove the rocker cover.
4. Turn the crankshaft clockwise until the notch on the pulley is lined up with the "T" mark on the timing indicator.
5. Move the rocker arms on the No. 1 and No. 4 cylinders up and down by hand to determine which cylinder has its piston at the top dead centre on the compression stroke. If both intake and exhaust valve rocker arms have a valve lash, the piston in the cylinder corresponding to these rocker arms is at the top dead centre on the compression stroke.
6. Valve clearance inspection and adjustment can be performed on rocker arms indicated by white arrow mark when the No. 1 cylinder piston is at the top dead centre on the compression stroke, and on rocker arms indicated by black arrow mark when the No. 4 cylinder piston is at the top dead centre on the compression stroke.
7. Measure the valve clearance.
   If the valve clearance is not as specified, loosen the rocker arm lock nut and adjust the clearance using a thickness gauge while turning the adjusting screw.

   **Standard value (hot engine):**
   **Intake valve: 0.20 mm**
   **Exhaust valve: 0.30 mm**
8. While holding the adjusting screw with a screwdriver to prevent it from turning, tighten the lock nut to the specified torque.

   **Tightening torque: 15 Nm**
9. Turn the crankshaft through 360° to line up the notch on the crankshaft pulley with the "T" mark on the timing indicator.
10. Repeat steps (7) and (8) on other valves for clearance adjustment.
11. Install the rocker cover.
12. Install the spark plugs and tighten to the specified torque.

    **Tightening torque: 25 Nm**

## IGNITION TIMING CHECK

1. Before inspection, set the vehicle to the pre-inspection condition.
2. Connect the MUT-II to the diagnosis connector.
3. Set up a timing light.
4. Start the engine and run at idle.
5. Check that engine idle speed is within the standard value.

   **Standard value: approx. 750 r/min**

6. Select No.17 of the MUT-II Actuator test.
7. Check that basic ignition timing is within the standard value.

   **Standard value: 5° BTDC±3°**

8. If the basic ignition timing is outside the standard value, inspect the MPI system while referring to GROUP 13B – Troubleshooting.
9. Press the MUT-II clear key (Select a forced driving cancel mode) to release the Actuator test.

   **Caution**
   **If the test is not cancelled, a forced driving will continue for 27 minutes. Driving under this condition may damage the engine.**
10. Check that ignition timing is at the standard value.

    **Standard value: approx. 10°BTDC**

    NOTE
    (1) Ignition timing is variable within about ± 7°, even under normal operating.
    (2) And it is automatically further advanced by about 5° from standard value at higher altitudes.

## IDLE SPEED CHECK <Vehicles with catalytic converter>

1. Before inspection, set the vehicle to the pre-inspection condition.
2. Turn the ignition switch to LOCK (OFF) position, and then connect the MUT-II to the diagnosis connector.
3. Check the basic ignition timing. Adjust if necessary.

   **Standard value: 5° BTDC±3°**

4. Run the engine at idle for 2 minutes.
5. Check the idle speed. Select item No. 22 and take a reading of the idle speed.

   **Curb idle speed: 750 ± 100 r/min**

   NOTE
   The idle speed is controlled automatically by the idle speed control (ISC) system.
6. If the idle speed is outside the standard value, check the MPI components by referring to GROUP 13B – Troubleshooting.

## IDLE MIXTURE CHECK <Vehicles with catalytic converter>

1. Before inspection, set the vehicle to the pre-inspection condition.
2. Turn the ignition switch to LOCK (OFF) position, and then connect the MUT-II to the diagnosis connector.
3. Check that the basic ignition timing is within the standard value.

   **Standard value: 5° BTDC±3°**

4. Run the engine at 2,500 r/min for 2 minutes.
5. Set the CO tester.
6. Check the CO contents at idle.

   **Standard value: 0.5% or less**

7. If there is a deviation from the standard value, check the following items:
   - Diagnosis output
   - Closed-loop control (When the closed-loop control is normal, the output signal of the oxygen sensor changes between 0–400 mV and 600–1,000 mV at idle.)
   - Fuel pressure
   - Injector
   - Ignition coil, spark plug cable, spark plug
   - Evaporative emission control system
   - Compression pressure

   NOTE
   Replace the three way catalyst when the CO contents are not within the standard value, even though the result of the inspection is normal on all items.

## IDLE SPEED AND MIXTURE CHECK AND ADJUSTMENT <Vehicles without catalytic converter>

1. Before inspection, set the vehicle to the pre-inspection condition.
2. Turn the ignition switch to LOCK (OFF) position, and then connect the MUT-II to the diagnosis connector.
3. Check the basic ignition timing. Adjust if necessary.

   **Standard value: 5° BTDC ± 3°**

4. Run the engine at idle for 2 minutes.
5. Check the idle speed. Select item No. 22 and take a reading of the idle speed.

   **Standard value: 750 ± 100 r/min**

   NOTE
   The idle speed is controlled automatically by the idle speed control (ISC) system.

6. If the idle speed is outside the standard value, inspect the MPI components by referring to GROUP 13B – Troubleshooting.
7. Set the CO tester
8. Run the engine for more than 10 seconds at 2,000 to 3,000 r/min.
9. Check the CO contents at idle.

   **Standard value: 1.5 ± 0.5 %**

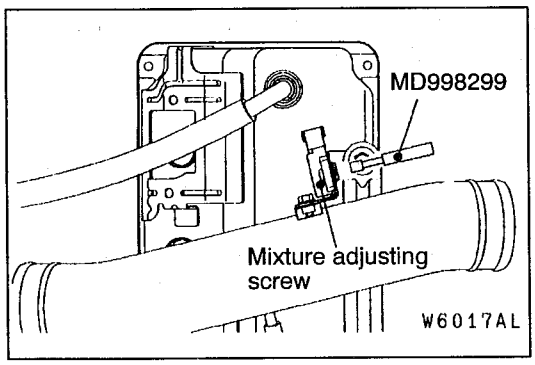


10. If there is deviation from the standard value, set the idle mixture to the specified value by adjusting the mixture adjusting screw (variable resistor).
    Use the special tool (MAS screwdriver) to turn the mixture adjusting screw.

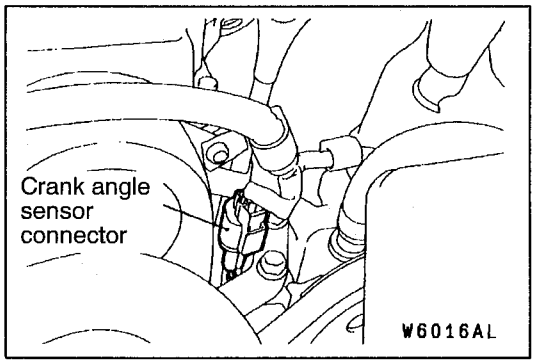


## COMPRESSION PRESSURE CHECK

1. Before inspection, set the vehicle to the pre-inspection condition.
2. Disconnect the spark plug cables.
3. Remove all of the spark plugs.
4. Disconnect the crank angle sensor connector.

   NOTE
   Doing this will prevent the engine-ECU from carrying out ignition and fuel injection.
5. Cover the spark plug hole with a shop towel etc., and after the engine has been cranked, check that no foreign material is adhering to the shop towel.

   **Caution**
   **(1) Keep away from the spark plug hole when cranking.**
   **(2) If compression is measured with water, oil, fuel, etc., that has come from cracks inside the cylinder, these materials will become heated and will gush out from the spark plug hole, which is dangerous.**

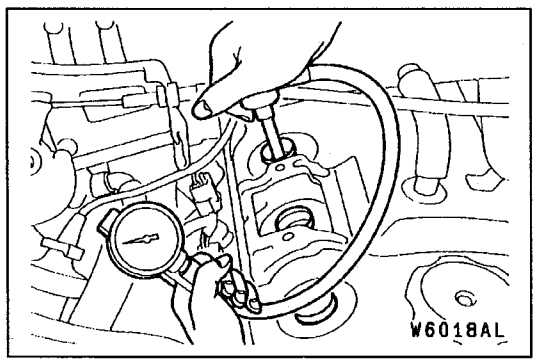


6. Set compression gauge to one of the spark plug holes.
7. Crank the engine with the throttle valve fully open and measure the compression pressure.

   **Standard value (at engine speed of 250 r/min): 1628 kPa**

   **Limit (at engine speed of 300 r/min): min. 1185 kPa**
8. Measure the compression pressure for all the cylinders, and check that the pressure differences of the cylinders are below the limit.

   **Limit: max. 100 kPa**
9. If there is a cylinder with compression or a compression difference that is outside the limit, pour a small amount of engine oil through the spark plug hole, and repeat the operations in steps from (6) to (8).
   (1) If the compression increases after oil is added, the cause of the malfunction is a worn or damaged piston ring and/or cylinder inner surface.
   (2) If the compression does not rise after oil is added, the cause is a burnt or defective valve seat, or pressure is leaking from the gasket.
10. Connect the crank angle sensor connector.
11. Install the spark plugs and spark plug cables.
12. Use the MUT-II to erase the diagnosis codes.

    NOTE
    This will erase the diagnosis code resulting from the crank angle sensor connector being disconnected.

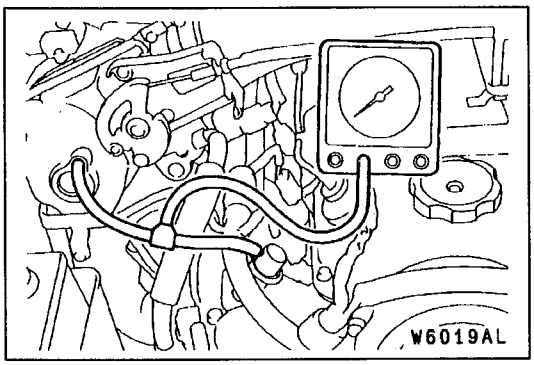


## MANIFOLD VACUUM CHECK

1. Set the vehicle to the pre-inspection condition.
2. Set the engine tachometer or connect the MUT-II.
3. Check that the idle speed is within the standard value.

   NOTE
   When using the MUT-II, select the code No.22.
4. Connect the three-way union joint to the vacuum hose between the fuel pressure regulator and the air intake plenum, and connect a vacuum gauge.
5. Check the manifold vacuum at idle.

   **Limit: 60 kPa**

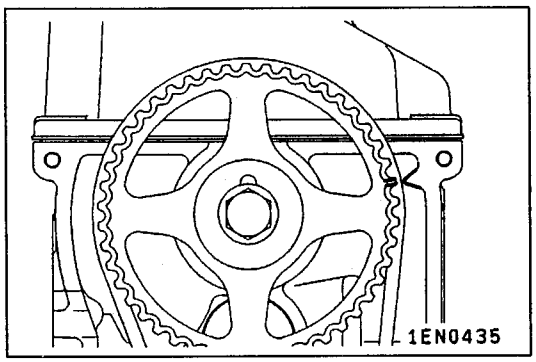


## TIMING BELT TENSION ADJUSTMENT

1. Remove the timing belt upper cover.
2. Turn the crankshaft clockwise to set the No. 1 cylinder to top dead compression centre.

   **Caution**
   **As the purpose of this procedure is to apply the proper amount of tension to the timing belt by means of the cam drive torque, be sure not to rotate the crankshaft in the opposite direction.**
3. Remove the access cover.
4. Loosen the timing belt tensioner fixing bolt to apply tension to the belt by means of the force of the tensioner spring.

   **Caution**
   **The bolt can be loosened 90°–180°.**
   **If the belt is loosened more than necessary, the bolt may fall in side the cover.**
5. Tighten the timing belt tensioner fixing bolt.
6. Install the access cover.
7. Install the timing belt upper cover.

# CRANKSHAFT PULLEY

## REMOVAL AND INSTALLATION

**Pre-removal Operation**
Under Cover (R.H.) Removal

**Post-installation Operation**
- Drive Belt Tension Adjustment (Refer to P.11B-5.)
- Under Cover (R.H.) Installation

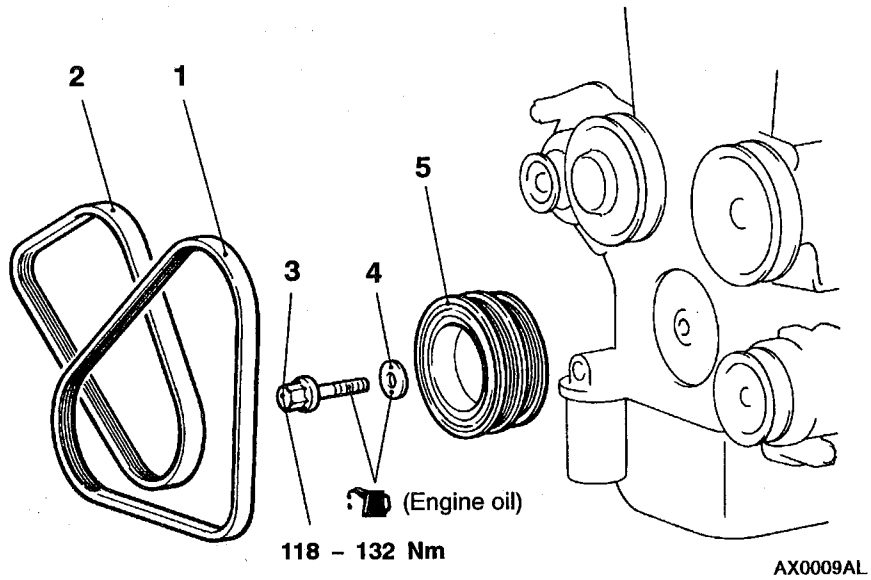


**Removal steps**
1. Drive belt (Power steering and A/C)
2. Drive belt (Alternator)

◀A▶ ▶A◀ 3. Crankshaft pulley bolt
4. Crankshaft pulley washer
5. Crankshaft pulley

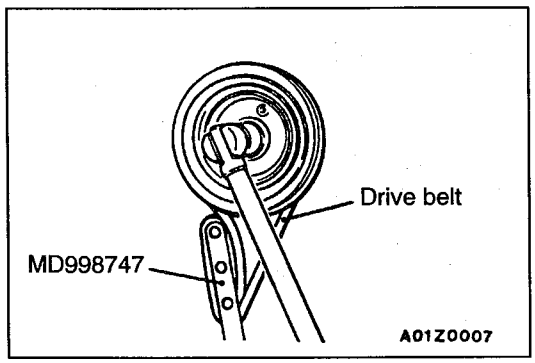


### REMOVAL SERVICE POINT

#### ◀A▶ CRANKSHAFT PULLEY BOLT REMOVAL

**Caution**
1. **Drive belt will be damaged when doing this work, so do not use the drive belt installed on the engine.**
2. **Never reuse the damaged drive belt.**

### INSTALLATION SERVICE POINT

#### ▶A◀ CRANKSHAFT PULLEY BOLT INSTALLATION

When installing the crankshaft bolt, apply the minimum amount of engine oil to the bearing surface and thread of the bolt.

**Caution**
1. **Drive belt will be damaged when doing this work, so do not use the drive belt installed on the engine.**
2. **Never reuse a damaged drive belt.**

# CAMSHAFT AND CAMSHAFT OIL SEAL

## REMOVAL AND INSTALLATION

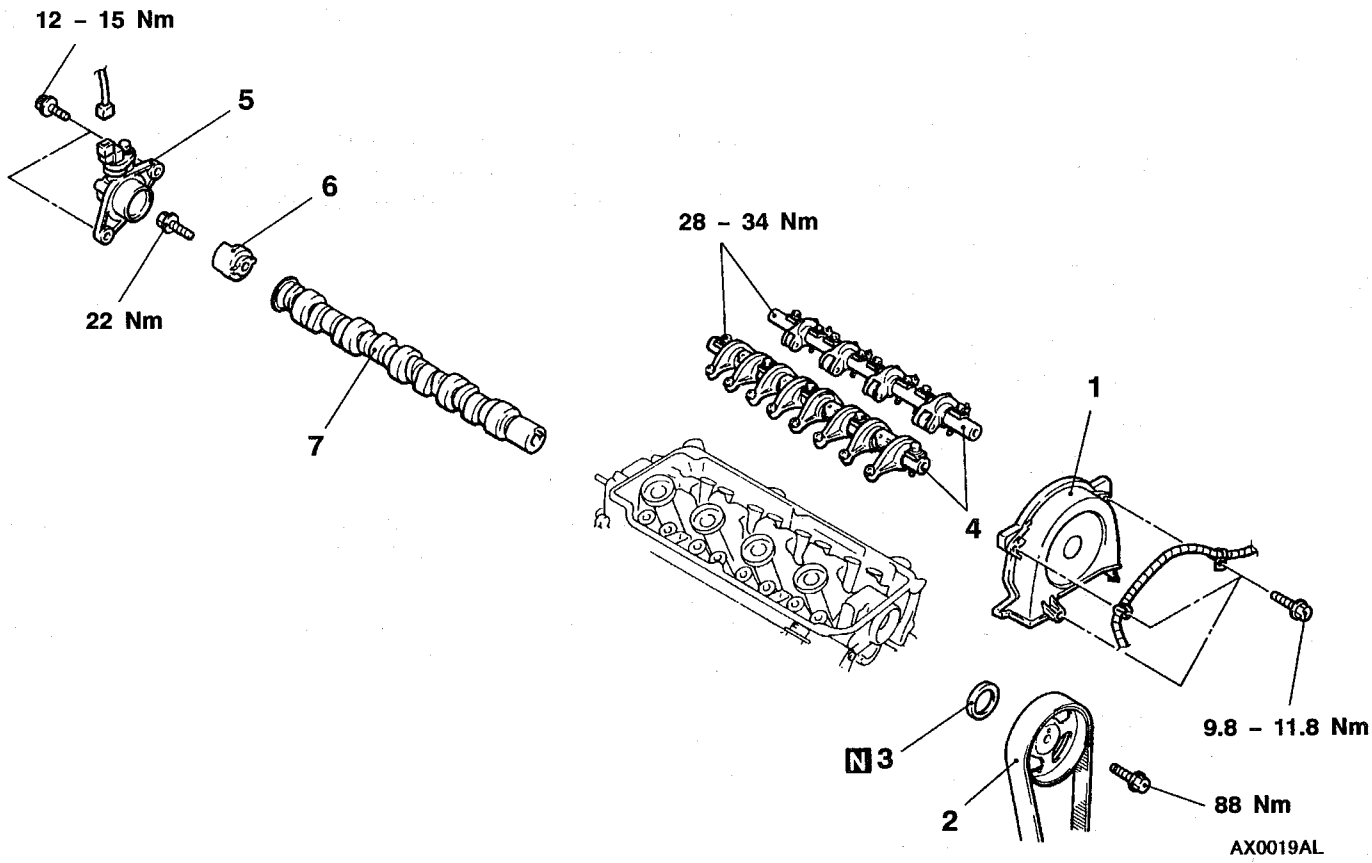


**Camshaft oil seal removal steps**

◀A▶ ▶C◀ 1. Timing belt upper cover
2. Camshaft sprocket and timing belt assembly
▶B◀ 3. Camshaft oil seal

**Camshaft removal steps**

- Cylinder head assembly (Refer to P.11B-23.)

◀B▶ 4. Rocker arm and shaft assembly
5. Cam position sensor support
6. Cam position sensing cylinder
▶A◀ 7. Camshaft

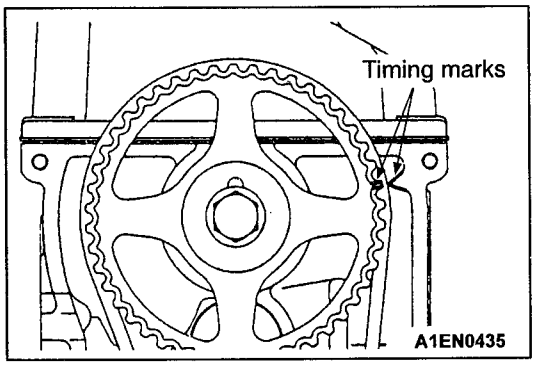


## REMOVAL SERVICE POINTS

### ◀A▶ CAMSHAFT SPROCKET AND TIMING BELT ASSEMBLY REMOVAL

1. Turn the crankshaft clockwise (right turn) to align the timing mark and to set the No.1 cylinder at compression top dead center

   **Caution**
   **The crankshaft should always be turned only clockwise.**

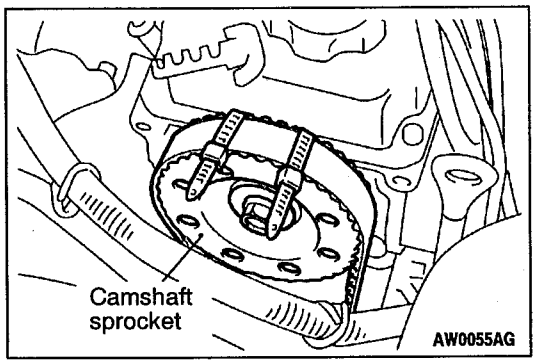


2. Tie the camshaft sprocket and timing belt with a band cable so that the position of the camshaft sprocket will not move with respect to the timing belt.

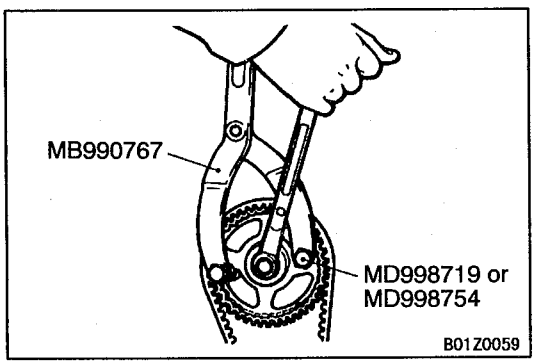


3. Use the special tools to remove the camshaft sprocket with the timing belt attached.

   **Caution**
   **After removing the camshaft sprocket, be sure not to rotate the crankshaft.**

### ◀B▶ ROCKER ARM AND SHAFT ASSEMBLY REMOVAL

Loosen the rocker arm and shaft assembly mounting bolt, and then remove the rocker arm and shaft assembly with the bolt still attached.

**Caution**
**Never disassemble the rocker arm and shaft assembly.**

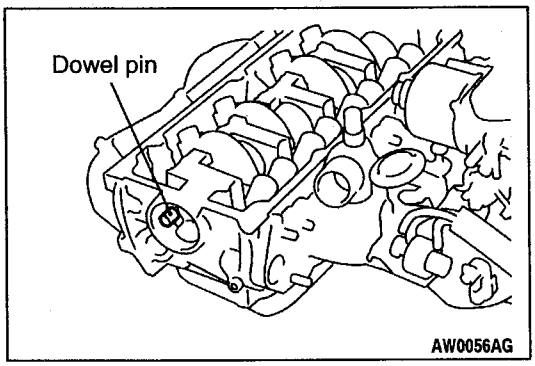


## INSTALLATION SERVICE POINTS

### ▶A◀ CAMSHAFT INSTALLATION

Install the camshaft with the dowel pin at the top position.

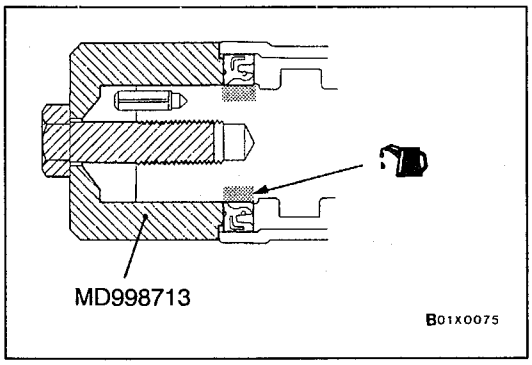


### ▶B◀ CAMSHAFT OIL SEAL INSTALLATION

1. Apply engine oil to the camshaft oil seal lip.
2. Use the special tool to press-fit the camshaft oil seal.

### ▶C◀ CAMSHAFT SPROCKET AND TIMING BELT ASSEMBLY INSTALLATION

1. Use the special tools to stop the camshaft sprocket from turning in the same way as was done during removal, and then tighten the camshaft sprocket securing bolt to the specified torque.

   **Tightening torque: 88 Nm**

2. Remove the band cable which binds the camshaft sprocket and timing belt.

# OIL PAN

## REMOVAL AND INSTALLATION

**Pre-removal and Post-installation Operation**
- Under Cover Removal and Installation
- Engine Oil Draining and Supplying (Refer to GROUP 12 – On-vehicle Service.)
- Drive Belt Tension Adjusting <Post-installation only> (Refer to P.11B-5.)
- Oil Level Gauge Removal and Installation
- Front Exhaust Pipe Removal and Installation (Refer to GROUP 15.)
- Check Dust Cover for Cracks or Damage by Pushing It with Finger. <Post-installation only>

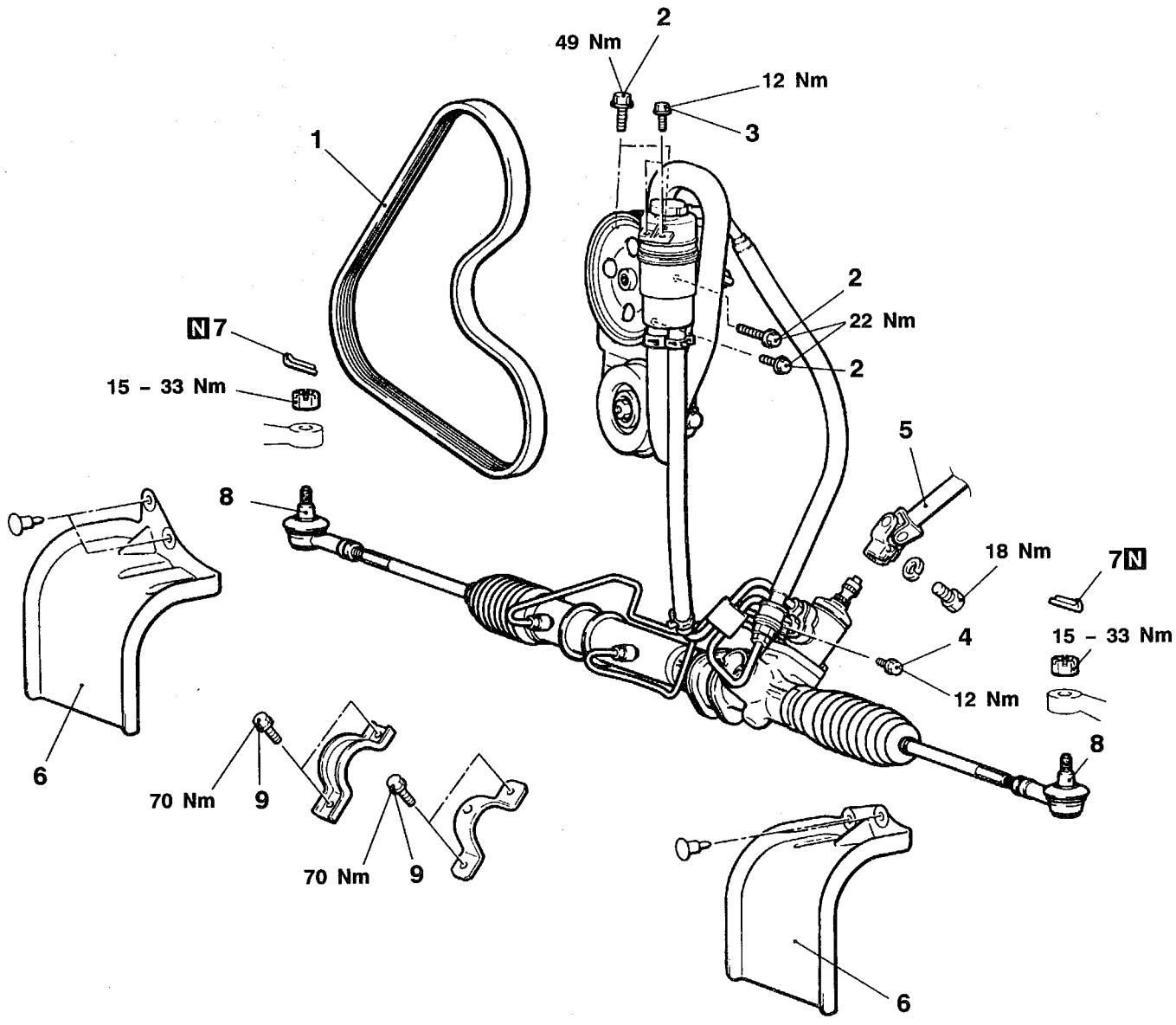


**Removal steps**

1. Drive belt (Power steering)
◀A▶ 2. Power steering oil pump and bracket mounting bolts
◀A▶ 3. Oil reservoir mounting bolt
4. Pressure hose clamp mounting bolt
5. Steering gear box and shaft connection
6. Splash shields
7. Split pins
◀B▶ 8. Tie rod end and knuckle connection
◀A▶ 9. Steering gear box mounting bolts

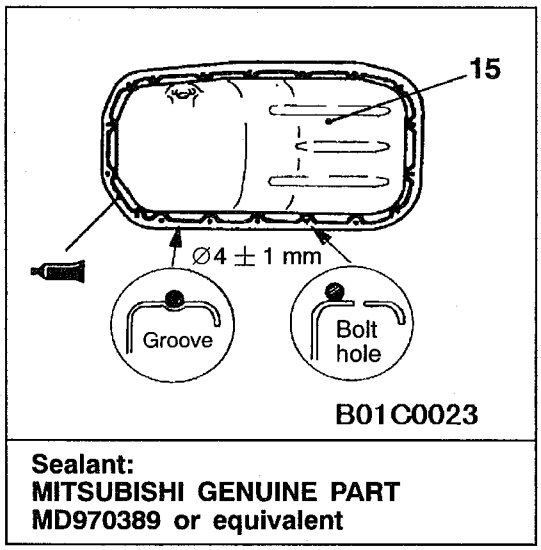


**Sealant:**
**MITSUBISHI GENUINE PART**
**MD970389 or equivalent**

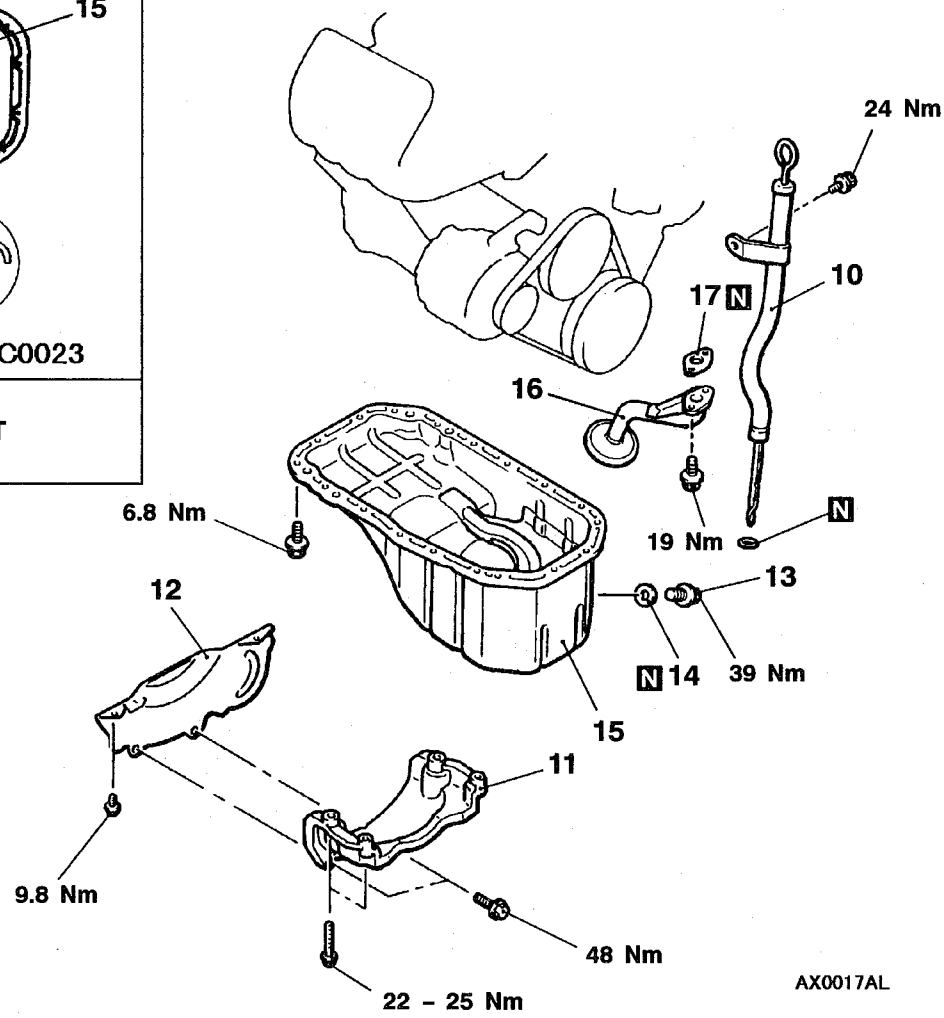


**Removal steps**

10. Oil level gauge assembly
11. Transmission stay
12. Bell housing cover
13. Drain plug

▶A◀ 14. Drain plug gasket
15. Oil pan
16. Oil screen
17. Oil screen gasket

## REMOVAL SERVICE POINTS

### ◀A▶ POWER STEERING OIL PUMP AND BRACKET MOUNTING BOLT/OIL RESERVOIR MOUNTING BOLT/STEERING GEAR BOX MOUNTING BOLT REMOVAL

With the hose still connected, remove the mounting bolts of the power steering oil pump and bracket, oil reservoir and steering gear box and keep in order until reassembly.

**Caution**
**Use care not to damage the hose and bellows.**

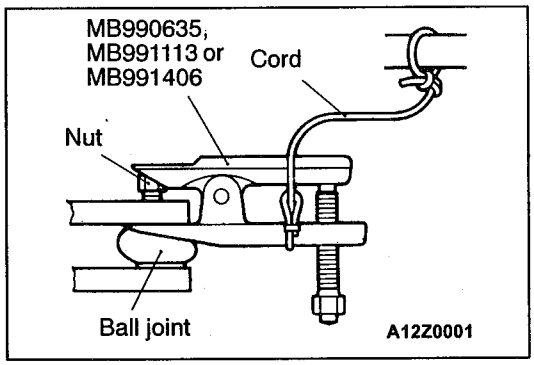


### ◀B▶ TIE ROD END AND KNUCKLE DISCONNECTION

**Caution**

1. **Loosen but do not remove the nut of the special tool. If removed, the ball joint thread damage may occur.**
2. **Tie the special tool with a cord to prevent it from falling off.**

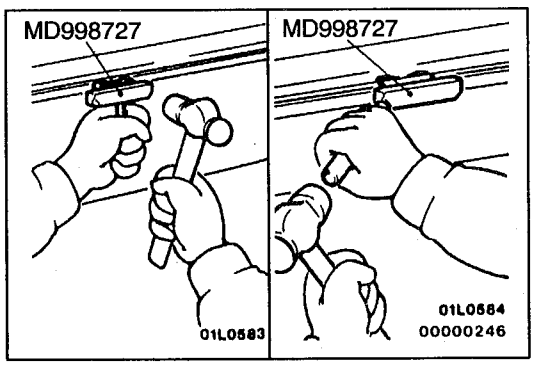


### ◀C▶ OIL PAN REMOVAL

After removing the oil pan mounting bolts, remove the oil pan with the special tool and a brass bar.

**Caution**

**Do this work gently or deformation of the oil pan flange may result.**

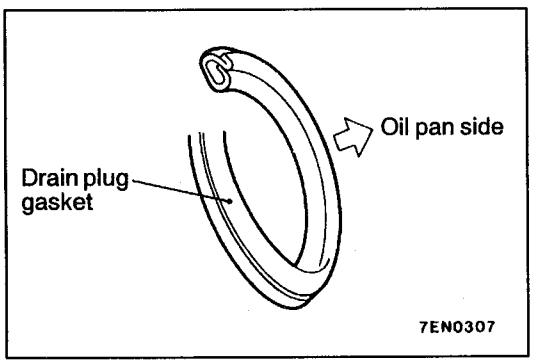


## INSTALLATION SERVICE POINT

### ▶A◀ DRAIN PLUG GASKET INSTALLATION

Install the drain plug gasket so that it faces the direction shown.

# CRANKSHAFT OIL SEAL

## REMOVAL AND INSTALLATION

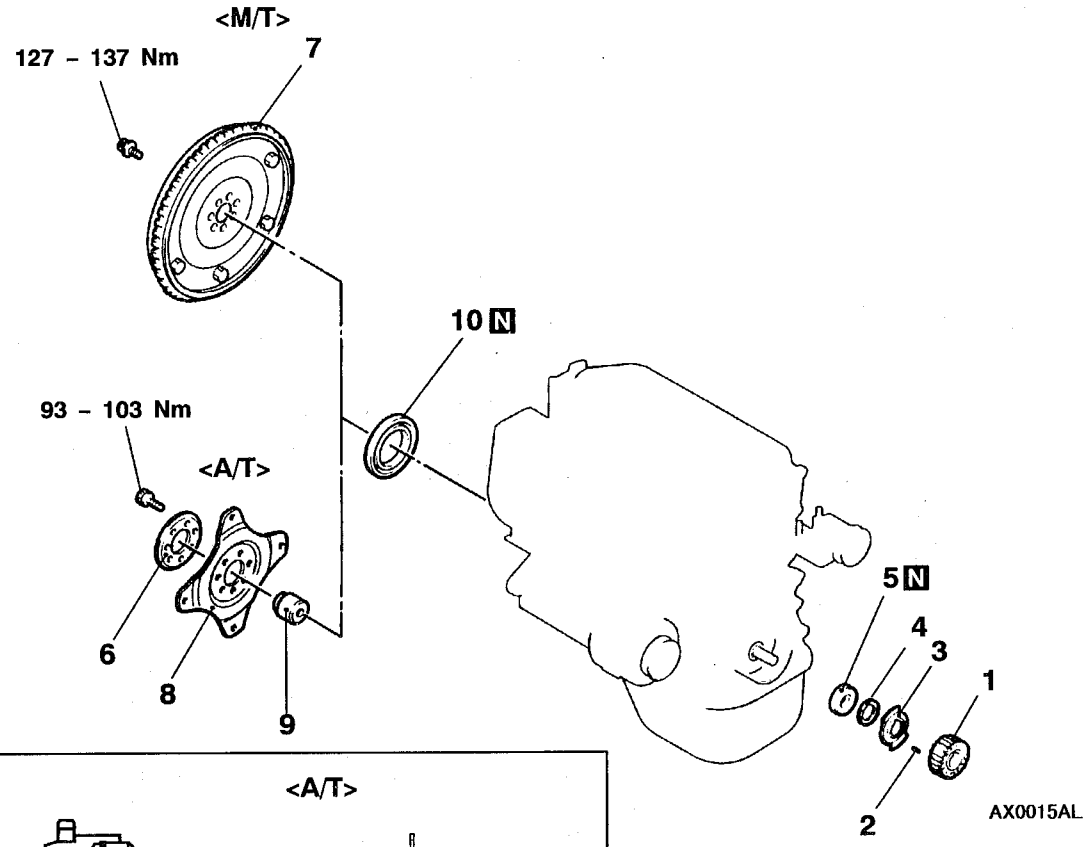


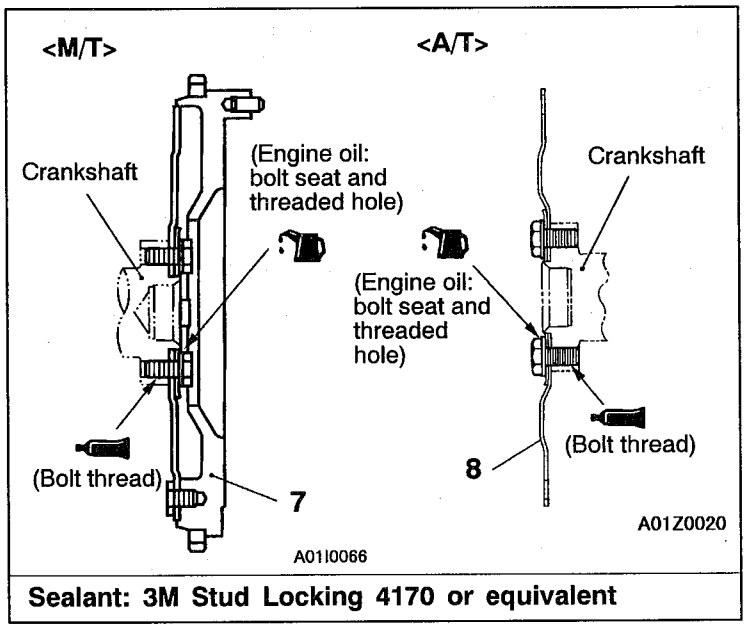


Sealant: 3M Stud Locking 4170 or equivalent

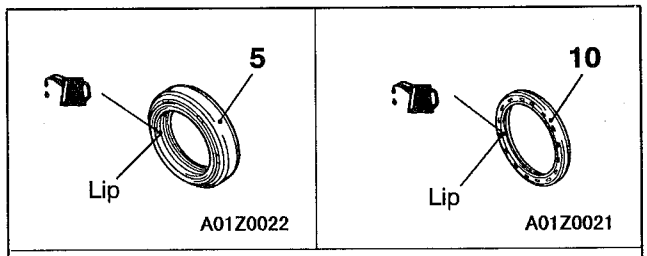


Engine oil

**Crankshaft front oil seal removal steps**

- Timing belt (Refer to P.11B-28.)
- Crank angle sensor (Refer to GROUP 16.)

1. Crankshaft sprocket
2. Key
3. Crankshaft sensing blade
4. Crankshaft spacer
- ▶C◀ 5. Crankshaft front oil seal

**Crankshaft rear oil seal removal steps**

- Transmission assembly (M/T: Refer to GROUP 22.) (A/T: Refer to GROUP 23.)
- Clutch cover and disc <M/T>

- ◀A▶ ▶B◀ 6. Adapter plate <A/T>
- ◀A▶ ▶B◀ 7. Flywheel <M/T>
- ◀A▶ ▶B◀ 8. Drive plate <A/T>
- ◀A▶ ▶B◀ 9. Crankshaft bush <A/T>
- ▶A◀ 10. Crankshaft rear oil seal

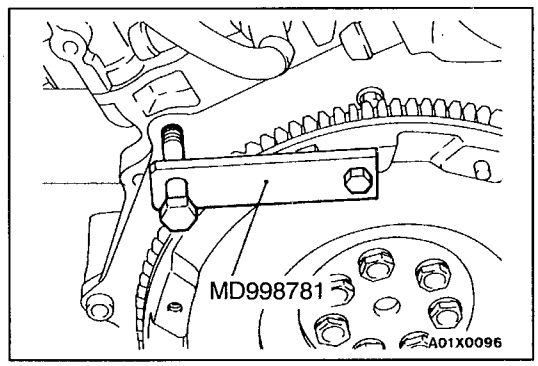


## REMOVAL SERVICE POINT

### ◀A▶ ADAPTOR PLATE<A/T>/FLYWHEEL <M/T>/ DRIVE PLATE <A/T>/CRANKSHAFT BUSH <A/T> REMOVAL

Use the special tool to secure the flywheel or drive plate, and remove the bolts.

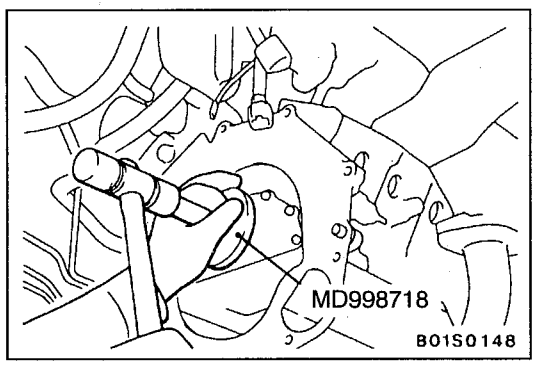


## INSTALLATION SERVICE POINTS

### ▶A◀ CRANKSHAFT REAR OIL SEAL INSTALLATION

1. Apply a small mount of engine oil to the entire circumference of the oil seal lip.
2. Install the oil seal by tapping it as far as the chamfered position of the oil seal case as shown in the illustration.

### ▶B◀ CRANKSHAFT BUSH <A/T>/DRIVE PLATE <A/T>/ FLYWHEEL <M/T>/ADAPTOR PLATE <A/T> INSTALLATION

1. Clean off all sealant, oil and other substances which are adhering to the threaded bolts, crankshaft thread holes and the flywheel or drive plate.
2. Apply oil to the bearing surface of the flywheel or drive plate bolts.
3. Apply oil to the crankshaft thread holes.
4. Apply sealant to the threaded mounting holes.

   **Specified sealant: 3M Stud locking 4170 or equivalent**
5. Use the special tool to hold the flywheel or drive plate in the same manner as removal, and install the bolt.

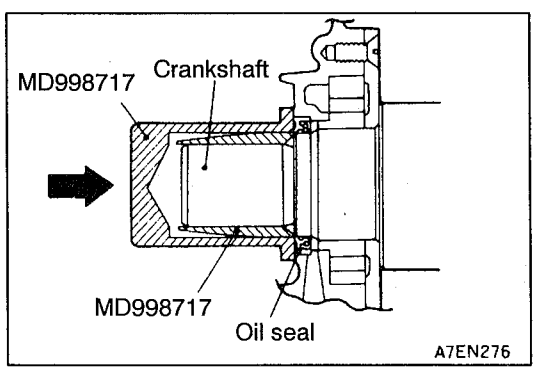


### ▶C◀ CRANKSHAFT FRONT OIL SEAL INSTALLATION

1. Apply a small amount of engine oil to the entire circumference of the oil seal lip.
2. Tap the oil seal unit it is flush with the oil seal case.

# CYLINDER HEAD GASKET

## REMOVAL AND INSTALLATION

**Pre-removal and Post-installation Operation**
- Fuel Discharge Prevention (Refer to GROUP 13B – On-vehicle Service.) <Pre-removal only>
- Accelerator Cable Adjustment (Refer to GROUP 17 – On-vehicle Service.) <Post-installation only>
- Engine Coolant Draining and Supplying (Refer to GROUP 14 – On-vehicle Service.)
- Engine Oil Draining and Supplying (Refer to GROUP 12 – On-vehicle Service.)
- Battery Removal and Installation
- Air Cleaner and Air Intake Pipe Removal and Installation (Refer to GROUP 15.)
- Ignition Coil Removal and Installation (Refer to GROUP 16.)

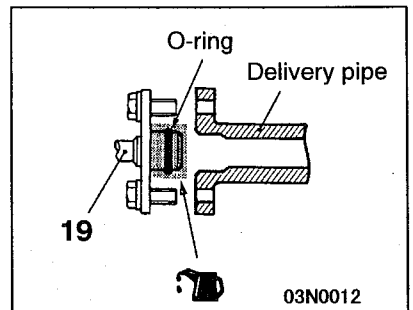


Engine oil

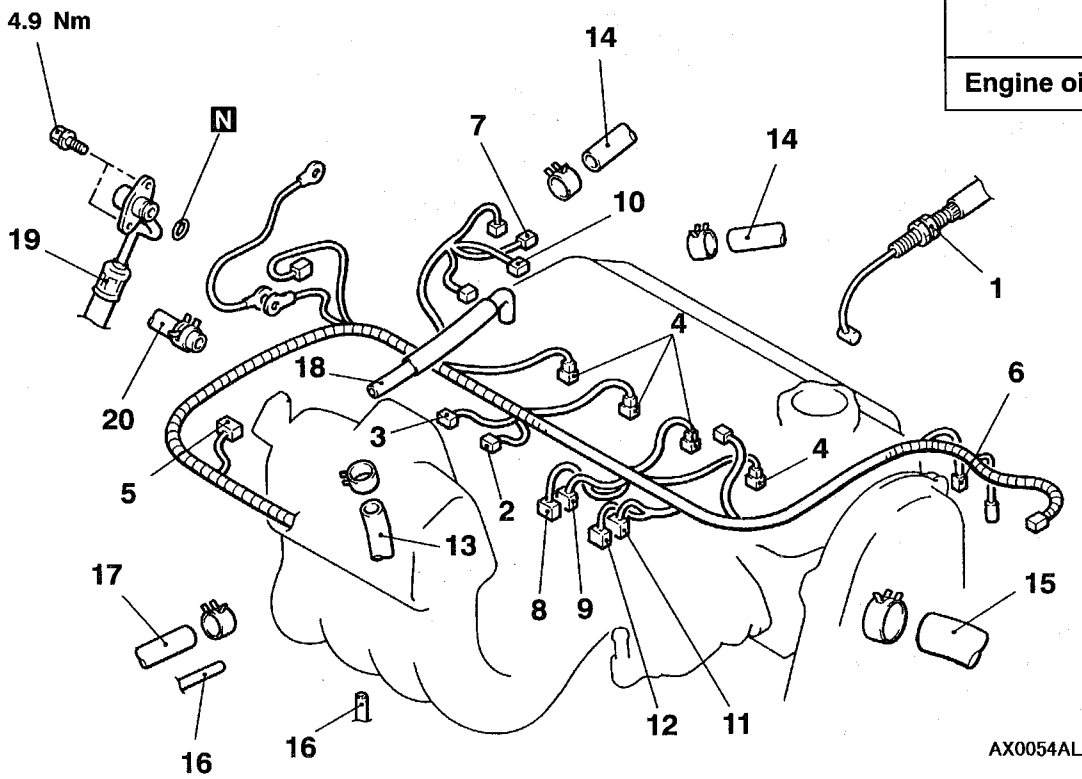


**Removal steps**
1. Accelerator cable connection
2. Throttle position sensor connector
3. Idle speed control servo connector
4. Injector connector
5. Boost sensor connector
6. Cam position sensor connector
7. Oxygen sensor connector
8. EGR solenoid valve connector
9. Purge control solenoid valve connector
10. Variable resister condenser
11. Engine coolant temperature sensor connector
12. Engine coolant temperature gauge unit connector
13. Water hose connection
14. Heater hose connection
15. Radiator upper hose connection
16. Vacuum hose connection
17. Brake booster vacuum hose connection
18. PCV hose
▶D◀ 19. High-pressure fuel hose connection
20. Fuel return hose connection

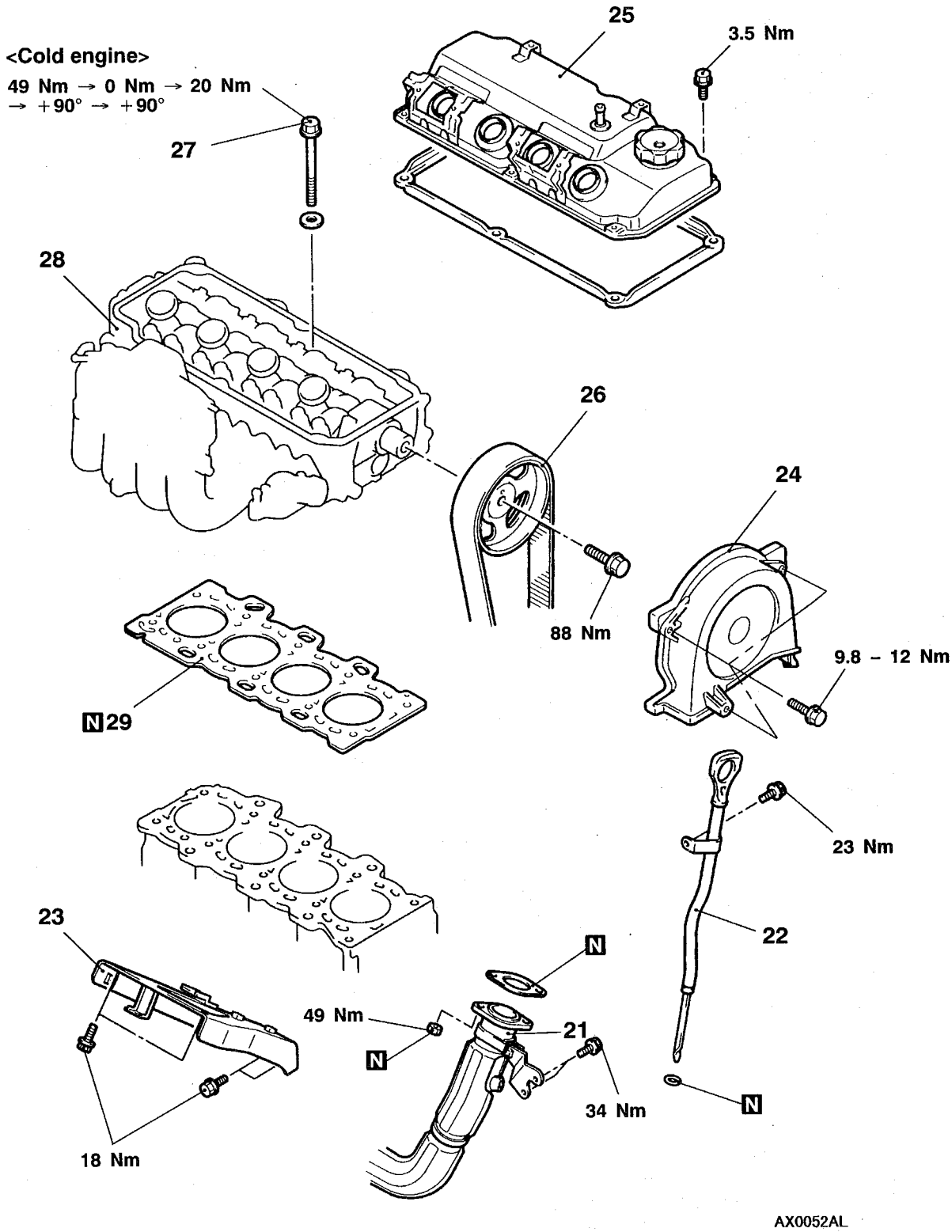


21. Front exhaust pipe connection
22. Oil level gauge assembly
23. Intake manifold stay
24. Timing belt upper cover
25. Rocker cover

◀A▶ ▶C◀ 26. Camshaft sprocket and timing belt assembly
◀B▶ ▶B◀ 27. Cylinder head bolts
28. Cylinder head assembly
▶A◀ 29. Cylinder head gasket

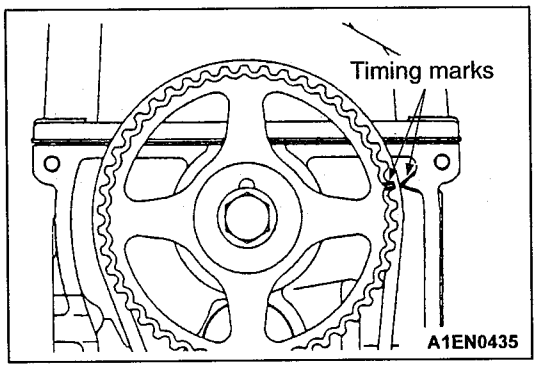


## REMOVAL SERVICE POINTS

### ◀A▶ CAMSHAFT SPROCKET AND TIMING BELT ASSEMBLY REMOVAL

1. Turn the crankshaft clockwise (right turn) to align the timing mark and to set the No.1 cylinder at compression top dead center

**Caution**
**The crankshaft should always be turned only clockwise.**

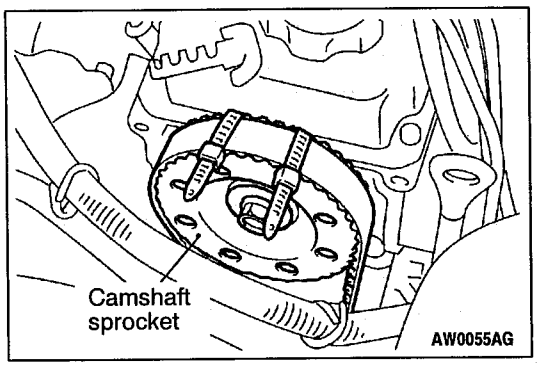


2. Tie the camshaft sprocket and timing belt with a band cable so that the position of the camshaft sprocket will not move with respect to the timing belt.

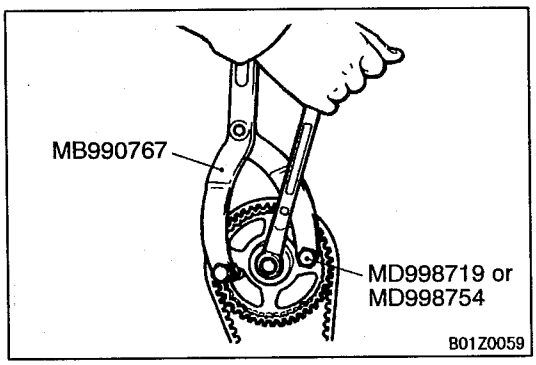


3. Use the special tools to remove the camshaft sprocket with the timing belt attached.

**Caution**
**After removing the camshaft sprocket, be sure not to rotate the crankshaft.**

### ◀B▶ CYLINDER HEAD BOLT REMOVAL

Use the special tool to loosen the bolts in two or three steps in the sequence shown, and then remove the bolts.

**Caution**
**Because the plug guides cannot be replaces by themselves, be careful not to damage or deform the plug guides when removing the cylinder head bolts.**

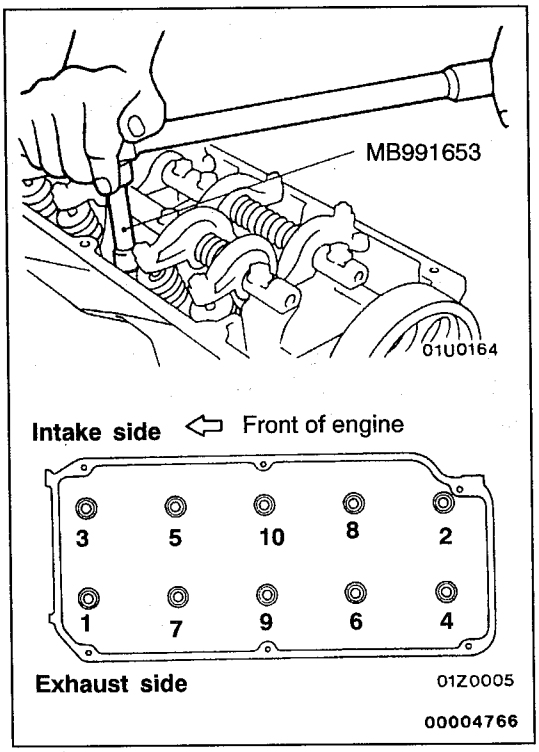

## INSTALLATION SERVICE POINTS

### ▶A◀ CYLINDER HEAD GASKET INSTALLATION

1. Wipe off all oil and grease from the gasket mounting surface.
2. Install so that the shapes of the cylinder head holes match the shapes of the respective cylinder head gasket holes.

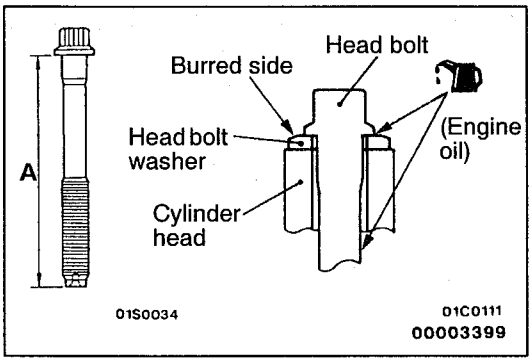


### ▶B◀ CYLINDER HEAD BOLT INSTALLATION

1. When installing the cylinder head bolts, the length below the head of the bolts should be within the limit. If it is outside the limit, replace the bolts.

   **Limit (A): 103.2 mm**

2. The head bolt washer should be installed with the burred side caused by tapping out facing upwards.
3. Apply a small amount of engine oil to the thread section and the washer of the cylinder head bolt.

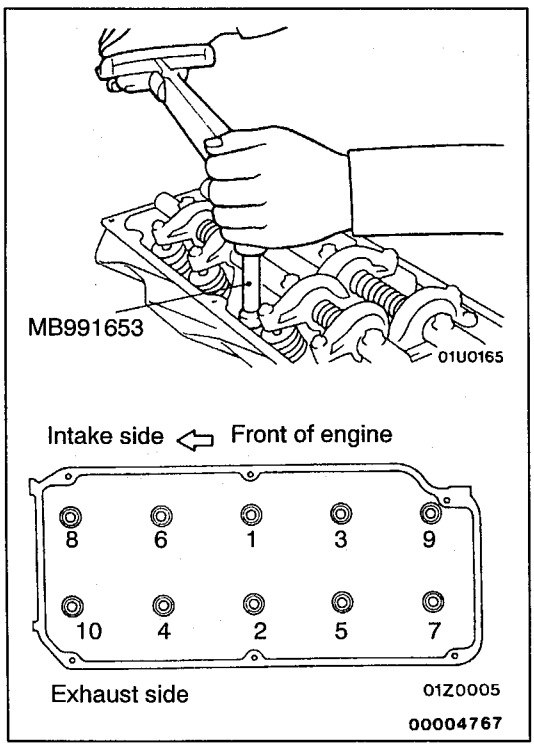


4. Using the special tool, tighten the bolts by the following procedure.

| Step | Operation | Remarks |
|---|---|---|
| 1 | Tighten to 49 Nm. | Carry out in the order shown in the illustration. |
| 2 | Fully loosen. | Carry out in the reverse order of that shown in the illustration. |
| 3 | Tighten to 20 Nm. | Carry out in the order shown in the illustration. |
| 4 | Tighten 90° of a turn. | In the order shown in the illustration. Mark the head of the cylinder head bolt and cylinder head by paint. |
| 5 | Tighten 90° of a turn. | In the order shown in the illustration. Check that the painted mark of the head bolt is lined up with that of the cylinder head. |

**Caution**

1. **Always make a tightening angle just 90°. If it is less than 90°, the head bolt will be loosened.**
2. **If it is more than 90°, remove the head bolt and repeat the procedure from Step 1.**

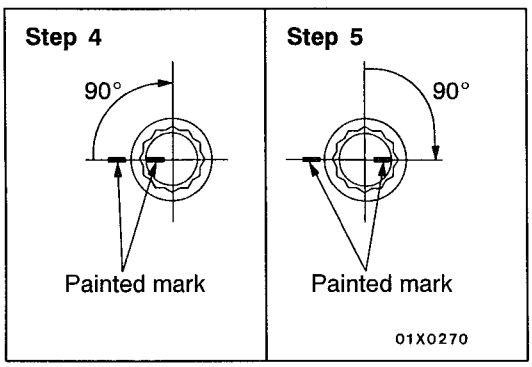

### ▶C◀ CAMSHAFT SPROCKET AND TIMING BELT ASSEMBLY INSTALLATION

1. Use the special tools to stop the camshaft sprocket from turning in the same way as was done during removal, and then tighten the camshaft sprocket securing bolt to the specified torque.

   **Tightening torque: 88 Nm**

2. Remove the band cable which binds the camshaft sprocket and timing belt.

### ▶D◀ HIGH-PRESSURE FUEL HOSE INSTALLATION

1. Apply a small amount of new engine oil to the O-ring.

   **Caution**
   **Do not allow any engine oil enter the delivery pipe.**

2. While turning the high-pressure fuel hose to the right and left, install the delivery pipe, while being careful not to damage the O-ring. After installing, check that the hose turns smoothly.
3. If the hose does not turn smoothly, the O-ring is probably being clamped. Disconnect the high-pressure fuel hose and check the O-ring for damage. After this, re-insert the delivery pipe and check that the hose turns smoothly.

# TIMING BELT

## REMOVAL AND INSTALLATION

**Pre-removal and Post-installation Operation**
- Under Cover Removal and Installation
- Crankshaft Pulley Removal and Installation (Refer to P.11B-14.)

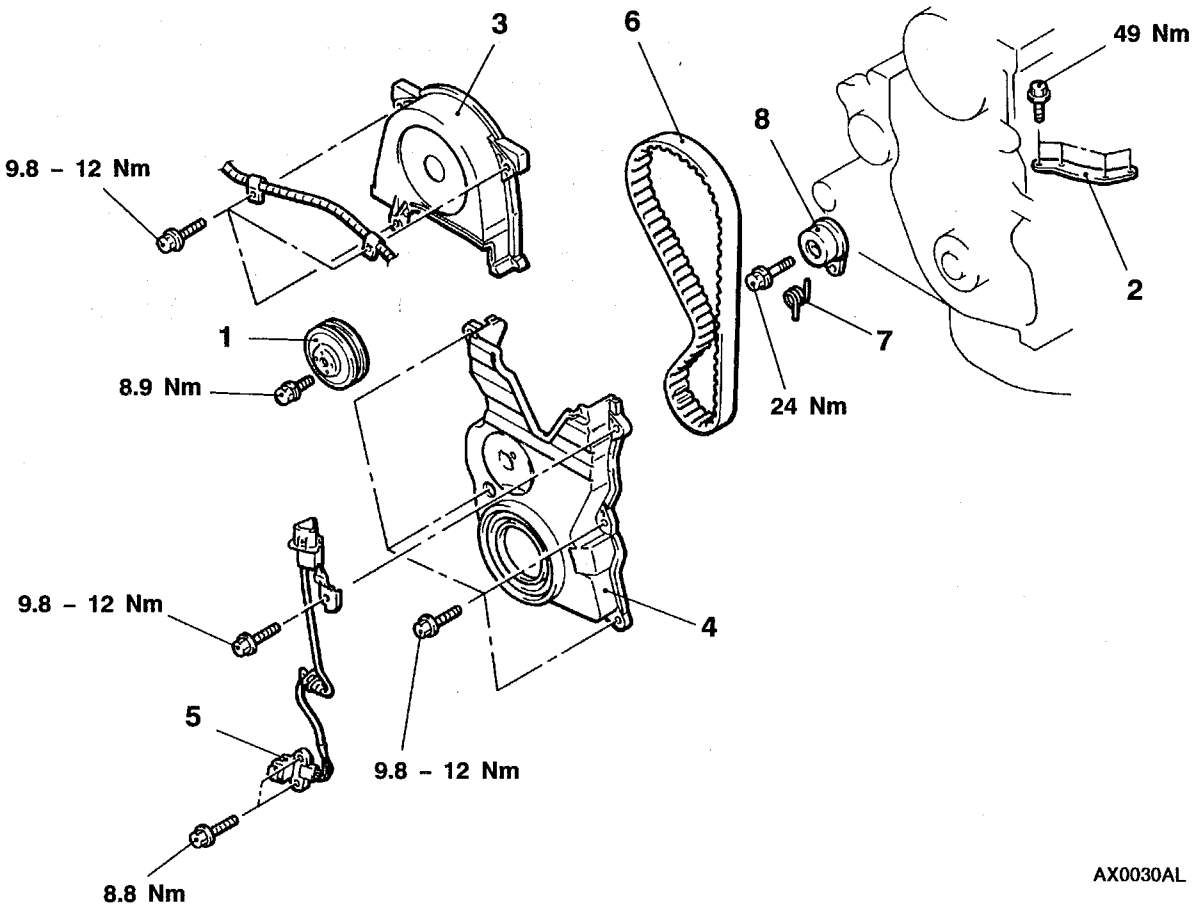


**Removal steps**

1. Water pump pulley
2. Power steering oil pump bracket Stay
3. Timing belt front upper cover
4. Timing belt front lower cover
5. Crank angle sensor

◀A▶ ▶B◀ • Timing belt tension adjustment

◀A▶ ▶A◀ 6. Timing belt

▶A◀ 7. Tensioner spring

▶A◀ 8. Timing belt tensioner

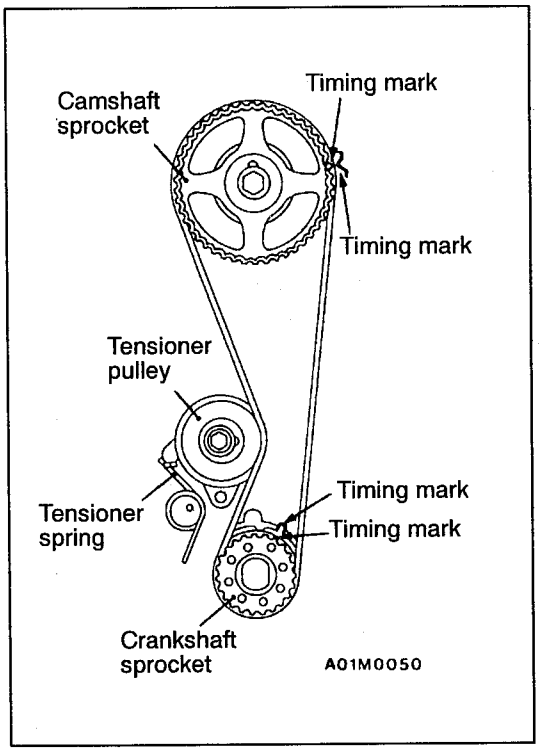


## REMOVAL SERVICE POINT

### ◀A▶ TIMING BELT REMOVAL

1. Turn the crankshaft clockwise (right turn) to align each timing mark and to set the No. 1 cylinder at compression top dead centre.

**Caution**
**The crankshaft should always be turned only clockwise.**

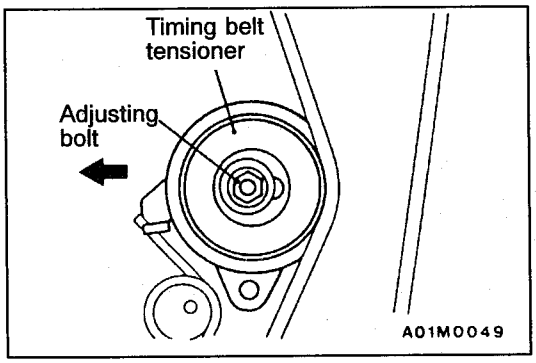


2. Loosen the adjusting bolt.
3. Move the timing belt tensioner to the water pump side and temporarily tighten the adjusting bolt so that the tensioner does not turn.
4. Remove the timing belt.

**Caution**
**If the timing belt is to be re-used, use chalk to mark the flat side of the belt with an arrow indicating the direction of rotation (right turn).**

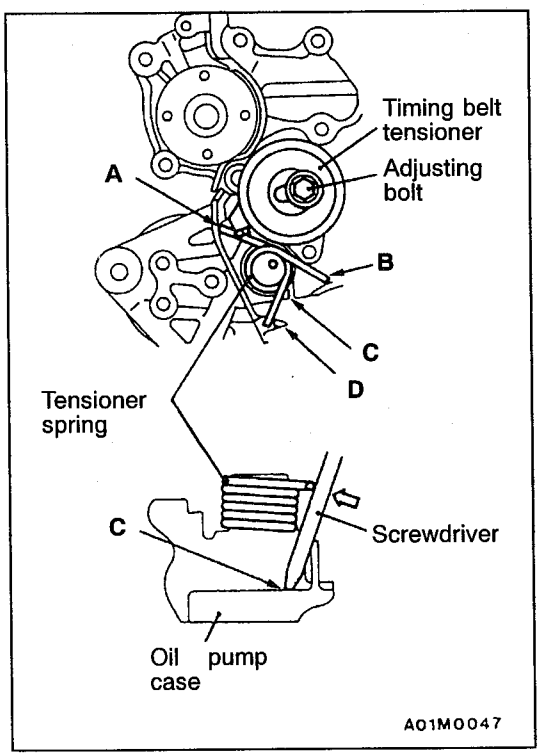


## INSTALLATION SERVICE POINTS

### ▶A◀ TIMING BELT/TENSIONER SPRING/TIMING BELT TENSIONER INSTALLATION

1. Put the protrusion of the timing belt tensioner on the tensioner spring end (A) as shown.
2. Move the timing belt tensioner close to the water pump, and temporarily tighten the adjusting bolt.
3. Put a screwdriver in (C), and push the protrusion (B) of the tensioner spring in the shown direction and place it on the stopper (D) of the oil pump case.

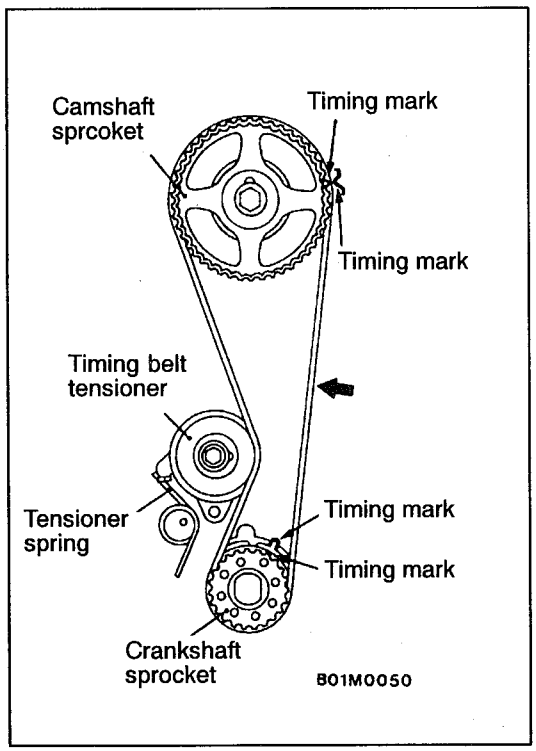


4. Align each of the camshaft sprocket and the crankshaft sprocket timing marks.
5. Install the timing belt in the following order, while making sure that the tension side of the belt is not slackened.
   (1) Crankshaft sprocket
   (2) Camshaft sprocket
   (3) Tensioner pulley

**Caution**
**After installing the timing belt, apply force to turn the camshaft sprocket in the reverse direction, and recheck to be sure that the belt is fully tensioned and that each timing mark is in the proper position.**

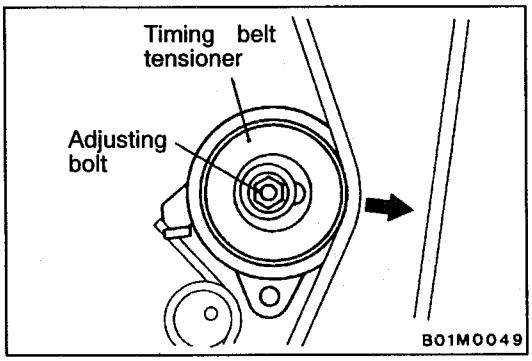


**▶B◀ TIMING BELT TENSION ADJUSTMENT**

1. Initially loosen the fixing bolt of the tensioner pulley fixed to the engine mount side by 1/2–1/4 turn, and use a force of the tensioner spring to apply tension to the belt.
2. Turn the crankshaft in the proper rotation direction (right turn) for two rotations, and recheck to be sure that the timing marks on each sprocket are aligned.

**Caution**
**As the purpose of this procedure is to apply the proper amount of tension to the tension side of the timing belt by using the cam driving torque, turn the crankshaft only by the amount given above. Be sure not to turn the crankshaft in the opposite direction (left turn).**

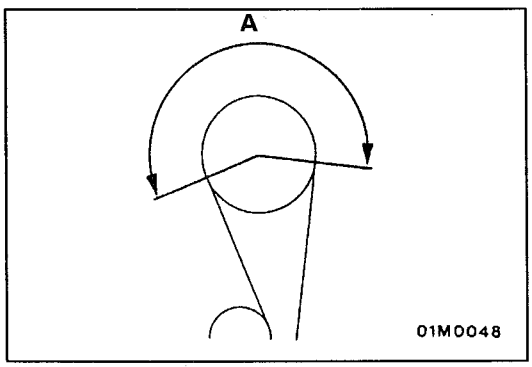


3. After checking to be sure that no belt teeth in the section marked with A are lifted up and that the teeth in each sprocket are engaged, secure the tensioner pulley.

# ENGINE ASSEMBLY

## REMOVAL AND INSTALLATION

**Caution**
***: Indicates parts which should be temporarily tightened, and then fully tightened with the vehicle on the ground in the unladen condition.**

**Pre-removal and Post-installation Operation**
- Fuel Line Pressure Releasing <before removal only> (Refer to GROUP 13B - On-vehicle Service.)
- Accelerator Cable Adjustment <after installation only> (Refer to GROUP 17 - On-vehicle Service.)
- Drive Belt Tension Adjustment <after installation only> (Refer to P.11B-5.)
- Hood Removal and Installation (Refer to GROUP 42.)
- Radiator Assembly Removal and Installation (Refer to GROUP 14.)
- Under Cover Removal and Installation
- Air Cleaner and Air Intake Pipe Removal and Installation (Refer to GROUP 15.)
- Front Exhaust Pipe Removal and Installation (Refer to GROUP 15.)
- Transmission Assembly Removal and Installation (Refer to GROUPs 22, 23.)

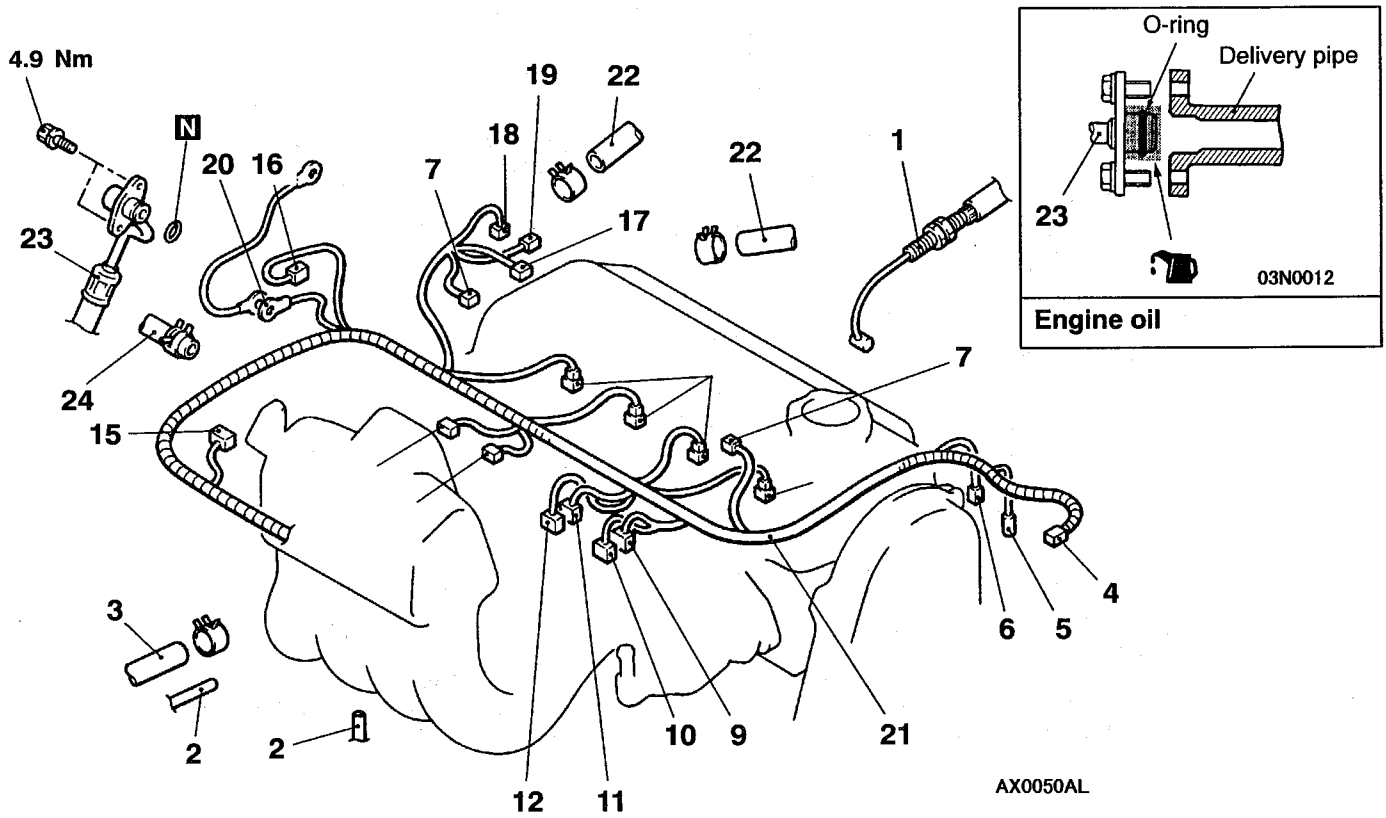


**Removal steps**
1. Accelerator cable connection
2. Vacuum hoses connection
3. Brake booster vacuum hose connection
4. A/C compressor magnetic clutch connector
5. Power steering oil pressure switch connector
6. Crank angle sensor connector
7. Ignition coil connector
8. Injector connector
9. Engine coolant temperature gauge unit connector
10. Engine coolant temperature sensor connector
11. Purge control solenoid valve connector
12. EGR solenoid valve connector
13. TPS connector
14. Idle speed control servo connector
15. Boost sensor connector
16. Capacitor connector
17. Variable resistor connector
18. Camshaft position sensor connector
19. Oxygen sensor connector
20. Earth cable connection
21. Engine harness
22. Heater hoses connection
- ▶B◀ 23. High-pressure fuel hose connection
24. Fuel return hose connection

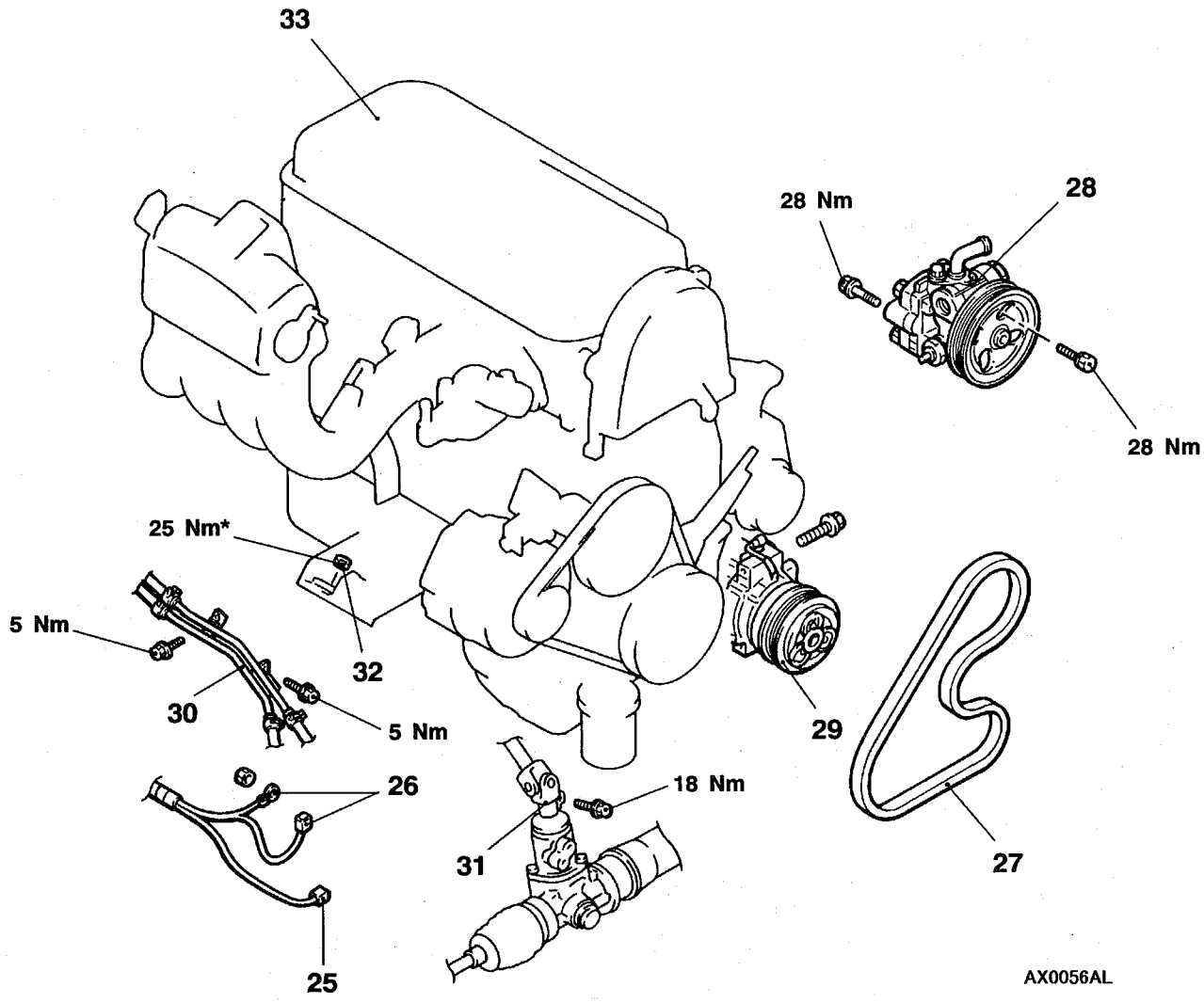


25. Oil pressure switch connector
26. Alternator connectors
27. Drive belt (power steering, A/C)
◀A▶ 28. Power steering oil pump assembly
◀B▶ 29. A/C compressor
30. A/T oil pipe clamp
31. Steering gear box and shaft connection
32. Engine mount mounting nut
◀C▶ ▶A◀ 33. Engine assembly

## REMOVAL SERVICE POINTS

### ◀A▶ POWER STEERING OIL PUMP REMOVAL

Remove the power steering oil pump with the hose attached from the engine.

NOTE
Place the removed power steering oil pump where it will not be a hindrance when removing and installing the engine assembly, and tie it with a cord.

### ◀B▶ A/C COMPRESSOR REMOVAL

Disconnect the A/C compressor connector and remove the compressor from the compressor bracket with the hose still attached.

NOTE
Place the removed A/C compressor where it will not be a hindrance when removing and installing the engine assembly, and tie it with a cord.

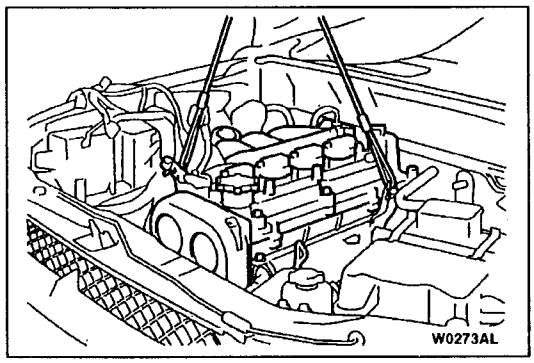


### ◀C▶ ENGINE ASSEMBLY REMOVAL

1. Ensure that all the cables, hoses, harness connectors and related parts have been disconnected.
2. Using a chain block, slowly lift the engine assembly upward the engine room to remove.

## INSTALLATION SERVICE POINTS

### ▶A◀ ENGINE ASSEMBLY INSTALLATION

Install the engine assembly, checking that the cables, hoses, and harness connectors are not clamped.

### ▶B◀ HIGH-PRESSURE FUEL HOSE INSTALLATION

1. Apply a small amount of new engine oil to the O-ring.

   **Caution**
   **Do not allow any engine oil enter the delivery pipe.**
2. While turning the high-pressure fuel hose to the right and left, install the delivery pipe, while being careful not to damage the O-ring. After installing, check that the hose turns smoothly.
3. If the hose does not turn smoothly, the O-ring is probably being clamped. Disconnect the high-pressure fuel hose and check the O-ring for damage. After this, re-insert the delivery pipe and check that the hose turns smoothly.

## NOTES

# ENGINE
# <4G9-MPI>

## CONTENTS


**GENERAL INFORMATION ..... 2**

**SERVICE SPECIFICATIONS ..... 2**

**SEALANTS ..... 4**

**SPECIAL TOOLS ..... 4**

**ON-VEHICLE SERVICE ..... 5**

- Drive Belt Tension Check and Adjustment ..... 5
- Valve Clearance Check and Adjustment ..... 8
- Ignition Timing Check ..... 9
- Idle Speed Check <Vehicles with catalytic converter> ..... 10
- Idle Mixture Check <Vehicles with catalytic converter> ..... 10
- Idle Speed and Mixture Check and Adjustment <Vehicles without catalytic converter> ..... 11
- Compression Pressure Check ..... 12
- Manifold Vacuum Check ..... 13
- Timing Belt Tension Adjustment ..... 13

**CRANKSHAFT PULLEY ..... 14**

**CAMSHAFT AND CAMSHAFT OIL SEAL ... 15**

**OIL PAN ..... 18**

**CRANKSHAFT OIL SEAL ..... 21**

**CYLINDER HEAD GASKET ..... 23**

**TIMING BELT ..... 28**

**ENGINE ASSEMBLY ..... 31**

# GENERAL INFORMATION

| Items | | | Specification |
|---|---|---|---|
| Total displacement mℓ | | | 1,834 |
| Bore × Stroke mm | | | 81.0 × 89.0 |
| Compression ratio | | | 9.5 |
| Combustion chamber | | | Pentroof type |
| Camshaft arrangement | | | SOHC |
| Number of valve | Intake | | 8 |
| | Exhaust | | 8 |
| Valve timing | Intake | Opening | BTDC 14° |
| | | Closing | ABDC 50° |
| | Exhaust | Opening | BBDC 58° |
| | | Closing | ATDC 10° |
| Fuel system | | | Electronically controlled multipoint fuel injection |
| Rocker arm | | | Roller type |
| Auto-lash adjuster | | | Not equipped |

# SERVICE SPECIFICATIONS

| Items | | Standard value | Limit |
|---|---|---|---|
| Alternator drive belt tension (When checked) | Vibration frequency Hz | 143 – 185 | – |
| | Tension N | 294 – 490 | – |
| | Deflection (Reference value) mm | 9.7 – 12.9 | – |
| Alternator drive belt tension (When adjusted) | Vibration frequency Hz | 155 – 175 | – |
| | Tension N | 343 – 441 | – |
| | Deflection (Reference value) mm | 10.5 – 12.0 | – |
| Alternator drive belt tension (When replaced) | Vibration frequency Hz | 203 – 234 | – |
| | Tension N | 588 – 784 | – |
| | Deflection (Reference value) mm | 6.7 – 8.5 | – |

| Items | | Standard value | Limit |
|---|---|---|---|
| Power steering oil pump and A/C compressor drive belt tension (When checked) | Vibration frequency Hz | 114 – 139 | – |
| | Tension N | 392 – 588 | – |
| | Deflection (Reference value) mm | 10.0 – 12.0 | – |
| Power steering oil pump and A/C compressor drive belt tension (When adjusted) | Vibration frequency Hz | 121 – 133 | – |
| | Tension N | 441 – 539 | – |
| | Deflection (Reference value) mm | 10.0 – 11.0 | – |
| Power steering oil pump and A/C compressor drive belt tension (When replaced) | Vibration frequency Hz | 145 – 166 | – |
| | Tension N | 637 – 833 | – |
| | Deflection (Reference value) mm | 7.0 – 9.0 | – |
| Valve clearance (at hot) mm | Intake valve | 0.20 | – |
| | Exhaust valve | 0.30 | – |
| Basic ignition timing | | 5°BTDC ± 3° | – |
| Idle speed r/min | | 700 ± 100 | – |
| CO contents % | Vehicles with catalytic converter | 0.5 or less | – |
| | Vehicles without catalytic converter | 1.5 ± 0.5 | – |
| Compression pressure (250 r/min) kPa | | 1370 | Min. 1039 |
| Compression pressure difference of all cylinder kPa | | – | Max. 100 |
| Intake manifold vacuum kPa | | – | Min. 60 |
| Cylinder head bolt shank length mm | | – | 96.4 |

## SEALANTS

| Items | Specified sealants | Remarks |
|---|---|---|
| Oil pan | MITSUBISHI GENUINE PART MD970389 or equivalent | Semi-drying sealant |
| Flywheel bolt <M/T> or drive plate bolt <A/T> | 3M ATD Part No.8660 or equivalent | Semi-drying sealant |

## SPECIAL TOOLS

| Tool | Number | Name | Use |
|---|---|---|---|
| 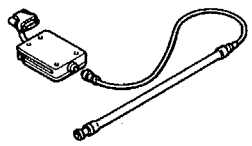 | MB991668 | Belt tension meter set | Drive belt tension measurement (used together with MUT-II) |
| 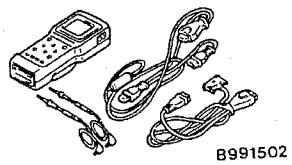 B991502 | MB991502 | MUT-II sub assembly | • Engine idle speed check<br>• Basic ignition timing check<br>• Drive belt tension measurement |
| 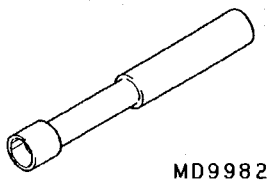 MD998299 | MD998299 | MAS screwdriver | Idle speed and mixture check and adjustment |
| 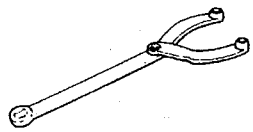 | MB990767 | End yoke holder | • Holding the camshaft sprocket<br>• Holding the crankshaft sprocket |
| 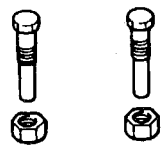 | MD998719 or MD998754 | Crankshaft pulley holder pin | • Holding the camshaft sprocket<br>• Holding the crankshaft sprocket |
| 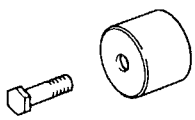 | MD998713 | Camshaft oil seal installer | Press-in of the camshaft oil seal |
| 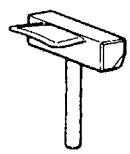 | MD998727 | Oil pan remover | Removal of oil pan |

| Tool | Number | Name | Use |
|---|---|---|---|
| 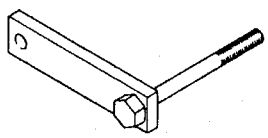 | MD998781 | Flywheel stopper | Securing the flywheel |
| 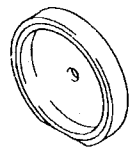 | MD998776 | Crankshaft rear oil seal installer | Press-in of the crankshaft rear oil seal |
| 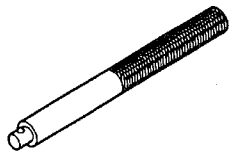 | MB990938 | Handle | Press-in of the crankshaft rear oil seal |
| 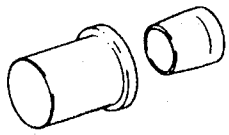 | MD998717 | Crankshaft front oil seal installer | Press-in of the crankshaft front oil seal |
| 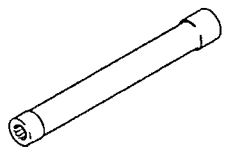 | MB991653 | Cylinder head bolt wrench | Cylinder head bolt removal and installation |

# ON-VEHICLE SERVICE

## DRIVE BELT TENSION CHECK AND ADJUSTMENT

### ALTERNATOR DRIVE BELT TENSION CHECK

Check the drive belt tension by the following procedure.

**Standard value:**

| | |
|---|---|
| Vibration frequency Hz | 143 – 185 |
| Tension N | 294 – 490 |
| Deflection (Reference value) mm | 9.7 – 12.9 |

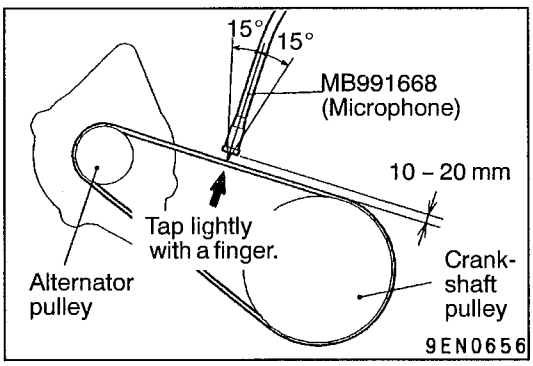


**<When using the MUT-II>**

1. Connect the special tool (MB991668) to the MUT-II.
2. Connect the MUT-II to the diagnosis connector.
3. Turn the ignition switch to ON and select "Belt Tension Measurement" from the menu screen.
4. Hold the microphone to the middle of the drive belt between the pulleys (at the place indicated by the arrow), about 10 – 20 mm away from the rear surface of the belt and so that it is perpendicular to the belt (within an angle of ± 15°).
5. Gently tap the middle of the belt between the pulleys (the place indicated by the arrow) with your finger as shown in the illustration, and check that the vibration frequency of the belt is within the standard value.

**Caution**

**(1) The temperature of the surface of the belt should be as close as possible to normal temperature.**
**(2) Do not let any contaminants such as water or oil get onto the microphone.**
**(3) If strong gusts of wind blow against the microphone or if there are any loud sources of noise nearby, the values measured by the microphone may not correspond to actual values.**
**(4) If the microphone is touching the belt while the measurement is being made, the values measured by the microphone may not correspond to actual values.**
**(5) Do not take the measurement while the vehicle's engine is running.**

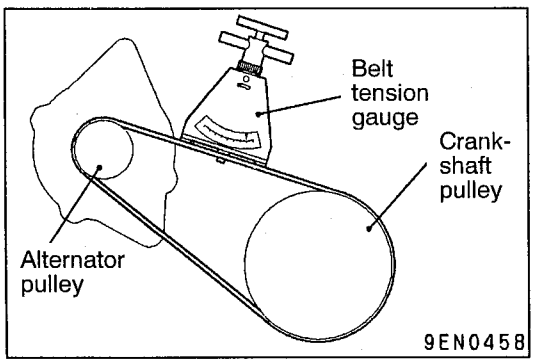


**<When using a tension gauge>**

Use a belt tension gauge to check that the belt tension is within the standard value.

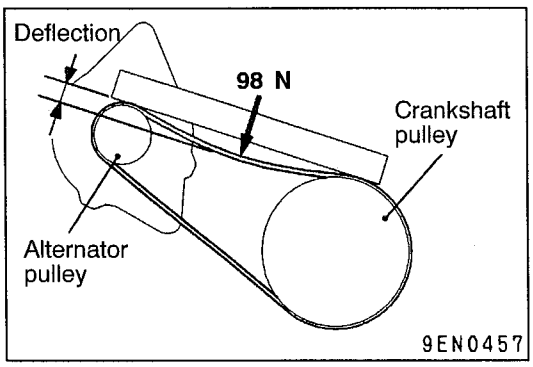


**<Belt deflection check>**

Apply 98 N of force to the middle of the drive belt between the pulleys (at the place indicated by the arrow) and check that the amount of deflection is within the standard value.

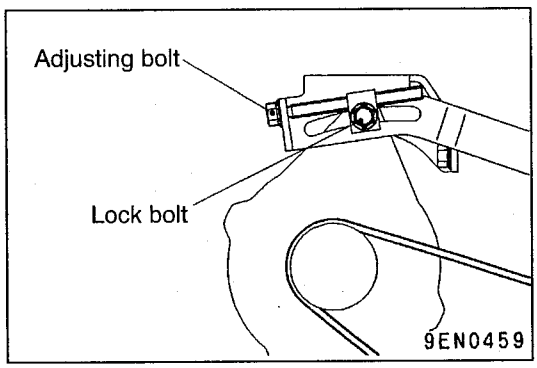


## ALTERNATOR DRIVE BELT TENSION ADJUSTMENT

1. Loosen the nut of the alternator pivot bolt.
2. Loosen the lock bolt.
3. Use the adjusting bolt to adjust the belt tension and belt deflection to the standard values.

**Standard value:**

| Items | When adjusted | When replaced |
|---|---|---|
| Vibration frequency Hz | 155 – 175 | 203 – 234 |
| Tension N | 343 – 441 | 588 – 784 |
| Deflection (Reference value) mm | 10.5 – 12.0 | 6.7 – 8.5 |

4. Tighten the nut of the alternator pivot bolt.
   **Tightening torque: 44 Nm**
5. Tighten the lock bolt.
   **Tightening torque: 22 Nm**
6. Tighten the adjusting bolt.
   **Tightening torque: 5 Nm**

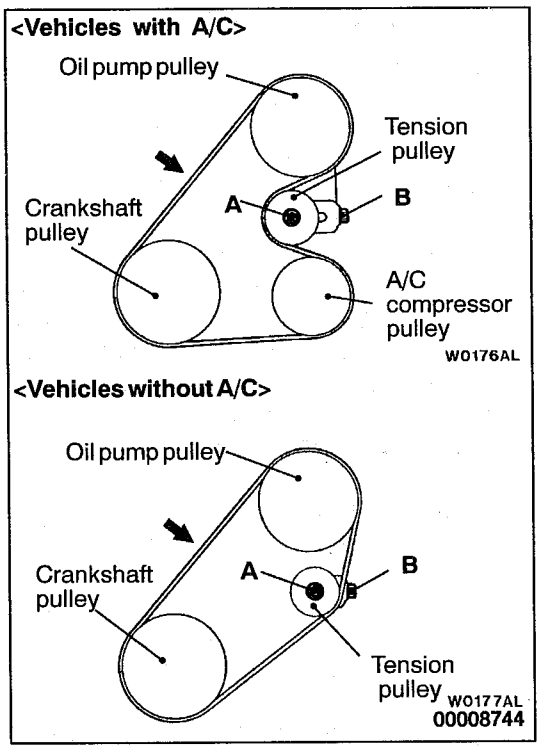


## POWER STEERING OIL PUMP AND AIR CONDITIONER COMPRESSOR DRIVE BELT TENSION CHECK AND ADJUSTMENT

1. Check if the belt tension is within the standard value using one of the methods below.

**Standard value:**

| Items | When checked | When adjusted | When replaced |
|---|---|---|---|
| Vibration frequency Hz | 114 – 139 | 121 – 133 | 145 – 166 |
| Tension N | 392 – 588 | 441 – 539 | 637 – 833 |
| Deflection (Reference value) mm | 10.0 – 12.0 | 10.0 – 11.0 | 7.0 – 9.0 |

**<When measuring the vibration frequency>**

With your finger tip lightly tap the centre of the belt between the pulleys in the location shown by the arrow in the illustration and then measure the belt vibration frequency.

NOTE
Refer to P.11C-6 for information regarding the vibration frequency measurement method using MUT-II.

**<When measuring the tension>**

Use a belt tension gauge to measure the belt tension.

**<When measuring the deflection>**

Apply 98 N of pressure against the location between the pulleys shown by the arrow in the illustration and then measure the deflection.

2. If the tension or deflection is outside the standard value, adjust by the following procedure.
   (1) Loosen tensioner pulley fixing nut A.
   (2) Adjust the amount of belt deflection using adjusting bolt B.
   (3) Tighten fixing nut A.

   **Tightening torque: 25 Nm**

   (4) Check the belt deflection amount and tension, and readjust if necessary.

   **Caution**
   **Check after turning the crankshaft once or more clockwise (right turn).**

## VALVE CLEARANCE CHECK AND ADJUSTMENT

1. Start the engine and allow it to warm up until the engine coolant temperature reaches 80 to 95°C.
2. Remove all spark plugs from the cylinder head for easy inspection.
3. Remove the rocker cover.
4. Turn the crankshaft clockwise until the notch on the pulley is lined up with the "T" mark on the timing indicator.
5. Move the rocker arms on the No. 1 and No. 4 cylinders up and down by hand to determine which cylinder has its piston at the top dead centre on the compression stroke. If both intake and exhaust valve rocker arms have a valve lash, the piston in the cylinder corresponding to these rocker arms is at the top dead centre on the compression stroke.
6. Valve clearance inspection and adjustment can be performed on rocker arms indicated by white arrow mark when the No. 1 cylinder piston is at the top dead centre on the compression stroke, and on rocker arms indicated by black arrow mark when the No. 4 cylinder piston is at the top dead centre on the compression stroke.
7. Measure the valve clearance.
   If the valve clearance is not as specified, loosen the rocker arm lock nut and adjust the clearance using a thickness gauge while turning the adjusting screw.

   **Standard value (hot engine):**
   **Intake valve: 0.20 mm**
   **Exhaust valve: 0.30 mm**

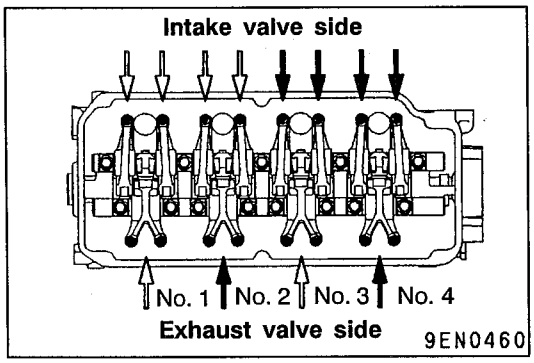

8. While holding the adjusting screw with a screwdriver to prevent it from turning, tighten the lock nut to the specified torque.

   **Tightening torque: 9 Nm**
9. Turn the crankshaft through 360° to line up the notch on the crankshaft pulley with the "T" mark on the timing indicator.
10. Repeat steps (7) and (8) on other valves for clearance adjustment.
11. Install the rocker cover.
12. Install the spark plugs and tighten to the specified torque.

    **Tightening torque: 25 Nm**

## IGNITION TIMING CHECK

1. Before inspection, set the vehicle to the pre-inspection condition.
2. Connect the MUT-II to the diagnosis connector.
3. Set up a timing light.
4. Start the engine and run at idle.
5. Check that engine idle speed is within the standard value.

   **Standard value: approx. 700 r/min**
6. Select No.17 of the MUT-II Actuator test.
7. Check that basic ignition timing is within the standard value.

   **Standard value: 5° BTDC±3°**
8. If the basic ignition timing is outside the standard value, inspect the MPI system while referring to GROUP 13C – Troubleshooting.
9. Press the MUT-II clear key (Select a forced driving cancel mode) to release the Actuator test.

   **Caution**
   **If the test is not cancelled, a forced driving will continue for 27 minutes. Driving under this condition may damage the engine.**
10. Check that ignition timing is at the standard value.

    **Standard value: approx. 5°BTDC**

    NOTE
    (1) Ignition timing is variable within about ± 7°, even under normal operating.
    (2) And it is automatically further advanced by about 5° from standard value at higher altitudes.

## IDLE SPEED CHECK <Vehicles with catalytic converter>

1. Before inspection, set the vehicle to the pre-inspection condition.
2. Turn the ignition switch to LOCK (OFF) position, and then connect the MUT-II to the diagnosis connector.
3. Check the basic ignition timing. Adjust if necessary.

   **Standard value: 5° BTDC±3°**

4. Run the engine at idle for 2 minutes.
5. Check the idle speed. Select item No. 22 and take a reading of the idle speed.

   **Curb idle speed: 700 ± 100 r/min**

   NOTE
   The idle speed is controlled automatically by the idle speed control (ISC) system.

6. If the idle speed is outside the standard value, check the MPI components by referring to GROUP 13C – Troubleshooting.

## IDLE MIXTURE CHECK <Vehicles with catalytic converter>

1. Before inspection, set the vehicle to the pre-inspection condition.
2. Turn the ignition switch to LOCK (OFF) position, and then connect the MUT-II to the diagnosis connector.
3. Check that the basic ignition timing is within the standard value.

   **Standard value: 5° BTDC±3°**

4. Run the engine at 2,500 r/min for 2 minutes.
5. Set the CO tester.
6. Check the CO contents at idle.

   **Standard value: 0.5% or less**

7. If there is a deviation from the standard value, check the following items:
   - Diagnosis output
   - Closed-loop control (When the closed-loop control is normal, the output signal of the oxygen sensor changes between 0–400 mV and 600–1,000 mV at idle.)
   - Fuel pressure
   - Injector
   - Ignition coil, spark plug cable, spark plug
   - Evaporative emission control system
   - Compression pressure

   NOTE
   Replace the three way catalyst when the CO contents are not within the standard value, even though the result of the inspection is normal on all items.

## IDLE SPEED AND MIXTURE CHECK AND ADJUSTMENT <Vehicles without catalytic converter>

1. Before inspection, set the vehicle to the pre-inspection condition.
2. Turn the ignition switch to LOCK (OFF) position, and then connect the MUT-II to the diagnosis connector.
3. Check the basic ignition timing. Adjust if necessary.

   **Standard value: 5° BTDC ± 3°**

4. Run the engine at idle for 2 minutes.
5. Check the idle speed. Select item No. 22 and take a reading of the idle speed.

   **Standard value: 700 ± 100 r/min**

   NOTE
   The idle speed is controlled automatically by the idle speed control (ISC) system.

6. If the idle speed is outside the standard value, inspect the MPI components by referring to GROUP 13C – Troubleshooting.
7. Set the CO tester
8. Run the engine for more than 10 seconds at 2,000 to 3,000 r/min.
9. Check the CO contents at idle.

   **Standard value: 1.5 ± 0.5 %**

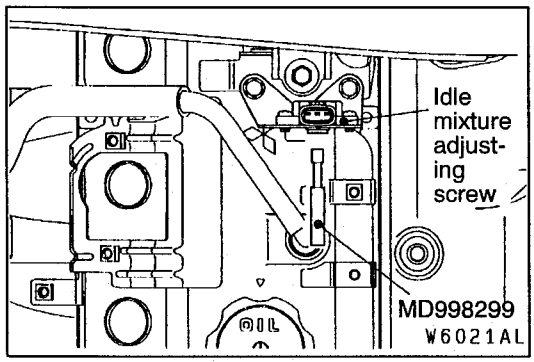


10. If there is deviation from the standard value, set the idle mixture to the specified value by adjusting the mixture adjusting screw (variable resistor).
    Use the special tool (MAS screwdriver) to turn the mixture adjusting screw.

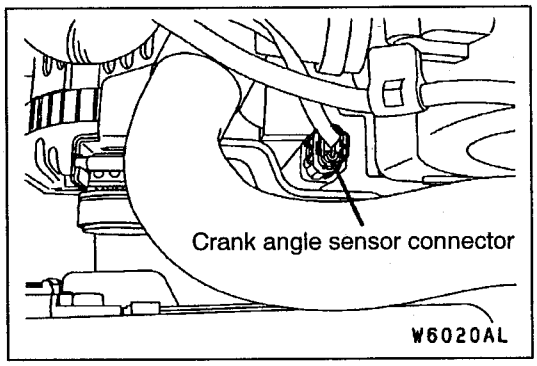


## COMPRESSION PRESSURE CHECK

1. Before inspection, set the vehicle to the pre-inspection condition.
2. Disconnect the spark plug cables.
3. Remove all of the spark plugs.
4. Disconnect the crank angle sensor connector.

   NOTE
   Doing this will prevent the engine-ECU from carrying out ignition and fuel injection.

5. Cover the spark plug hole with a shop towel etc., and after the engine has been cranked, check that no foreign material is adhering to the shop towel.

   **Caution**
   **(1) Keep away from the spark plug hole when cranking.**
   **(2) If compression is measured with water, oil, fuel, etc., that has come from cracks inside the cylinder, these materials will become heated and will gush out from the spark plug hole, which is dangerous.**

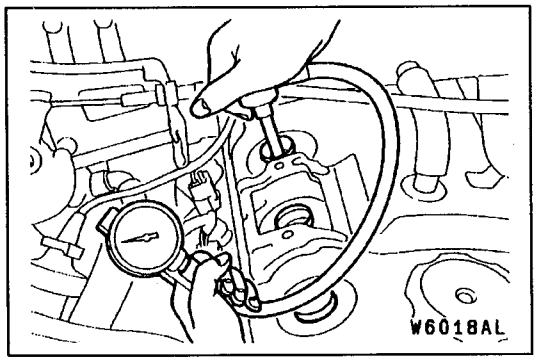


6. Set compression gauge to one of the spark plug holes.
7. Crank the engine with the throttle valve fully open and measure the compression pressure.

   **Standard value (at engine speed of 250 r/min): 1370 kPa**

   **Limit (at engine speed of 250 r/min): min. 1039 kPa**

8. Measure the compression pressure for all the cylinders, and check that the pressure differences of the cylinders are below the limit.

   **Limit: max. 100 kPa**

9. If there is a cylinder with compression or a compression difference that is outside the limit, pour a small amount of engine oil through the spark plug hole, and repeat the operations in steps from (6) to (8).
   (1) If the compression increases after oil is added, the cause of the malfunction is a worn or damaged piston ring and/or cylinder inner surface.
   (2) If the compression does not rise after oil is added, the cause is a burnt or defective valve seat, or pressure is leaking from the gasket.
10. Connect the crank angle sensor connector.
11. Install the spark plugs and spark plug cables.
12. Use the MUT-II to erase the diagnosis codes.

    NOTE
    This will erase the diagnosis code resulting from the crank angle sensor connector being disconnected.

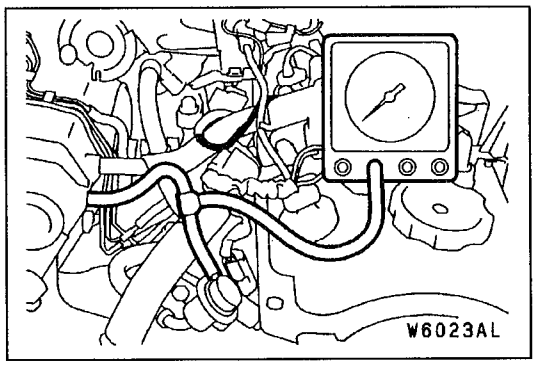


## MANIFOLD VACUUM CHECK

1. Set the vehicle to the pre-inspection condition.
2. Set the engine tachometer or connect the MUT-II.
3. Check that the idle speed is within the standard value.

   NOTE
   When using the MUT-II, select the code No.22.
4. Connect the three-way union joint to the vacuum hose between the fuel pressure regulator and the air intake plenum, and connect a vacuum gauge.
5. Check the manifold vacuum at idle.

   **Limit: 60 kPa**

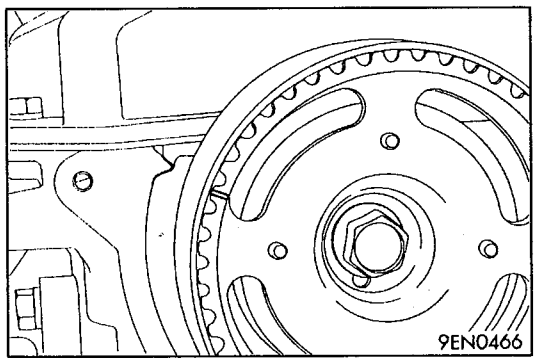


## TIMING BELT TENSION ADJUSTMENT

1. Remove the timing belt upper cover.
2. Turn the crankshaft clockwise to set the No. 1 cylinder to top dead compression centre.

   **Caution**
   **As the purpose of this procedure is to apply the proper amount of tension to the timing belt by means of the cam drive torque, be sure not to rotate the crankshaft in the opposite direction.**
3. Remove the access cover.
4. Loosen the timing belt tensioner fixing bolt to apply tension to the belt by means of the force of the tensioner spring.

   **Caution**
   **The bolt can be loosened 90°–180°.**
   **If the belt is loosened more than necessary, the bolt may fall in side the cover.**
5. Tighten the timing belt tensioner fixing bolt.
6. Install the access cover.
7. Install the timing belt upper cover.

# CRANKSHAFT PULLEY

## REMOVAL AND INSTALLATION

**Pre-removal and Post-installation Operation**
Under Cover Removal and Installation

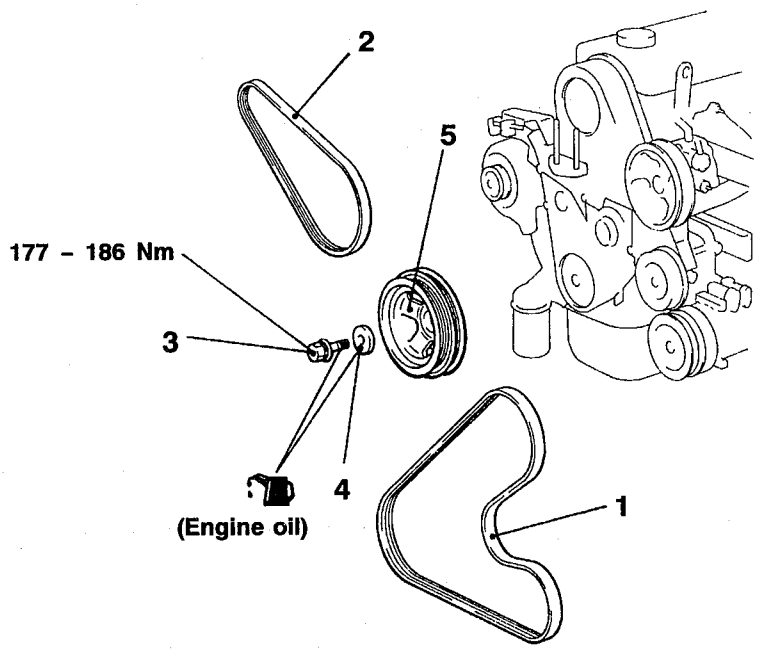


**Removal steps**

- Drive belt tension adjustment (Refer to P.11C-5.)

1. Drive belt (Power steering and A/C)
2. Drive belt (Alternator)

◀A▶ ▶A◀

3. Crankshaft pulley bolt
4. Crankshaft pulley washer
5. Crankshaft pulley

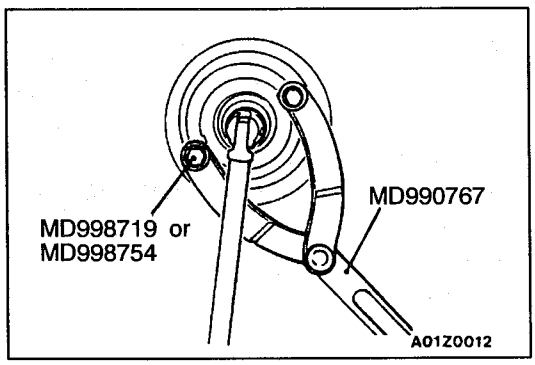


### REMOVAL SERVICE POINT

**◀A▶ CRANKSHAFT PULLEY BOLT REMOVAL**

### INSTALLATION SERVICE POINT

**▶A◀ CRANKSHAFT PULLEY BOLT INSTALLATION**

When installing the crankshaft bolt, apply the minimum amount of engine oil to the bearing surface and thread of the bolt.

# CAMSHAFT AND CAMSHAFT OIL SEAL

## REMOVAL AND INSTALLATION

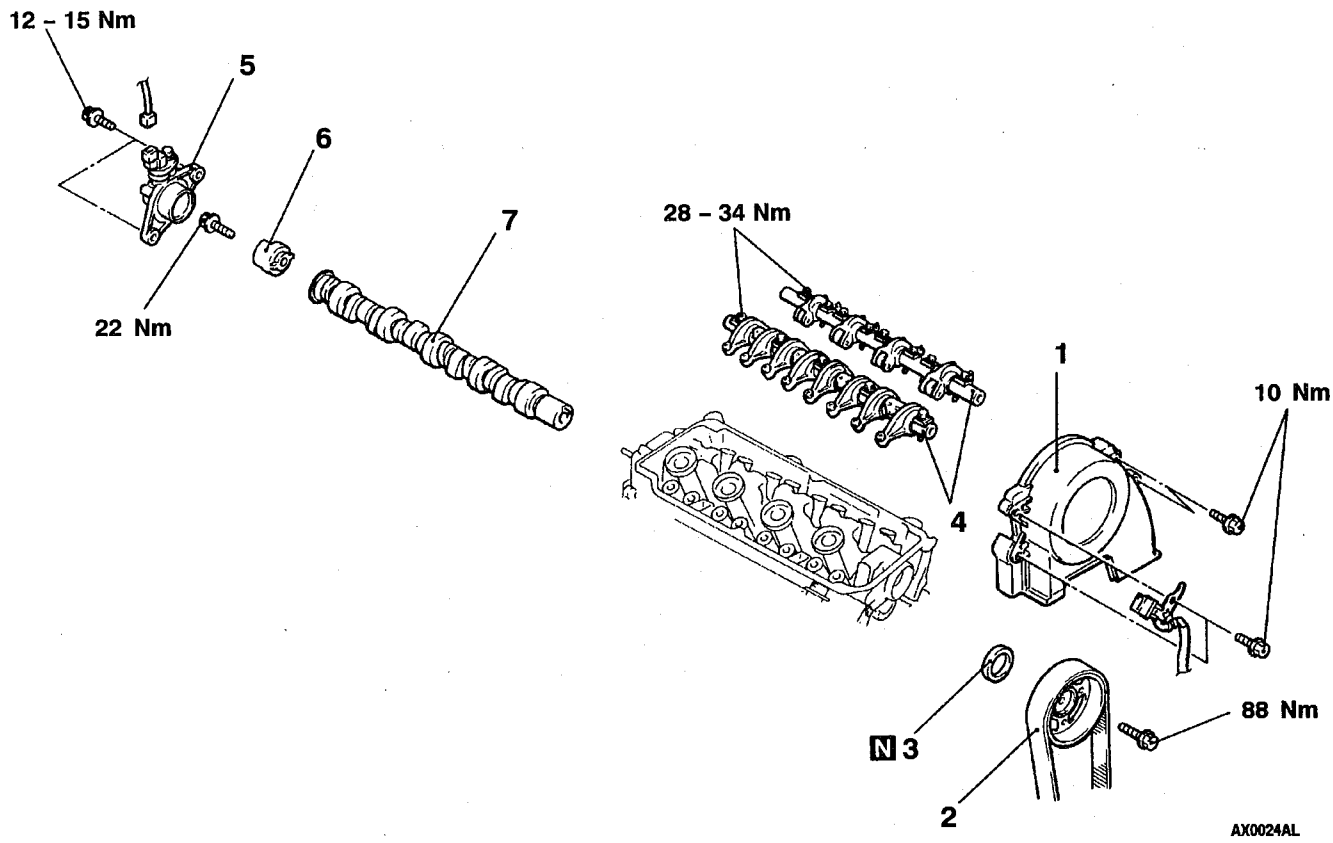


**Camshaft oil seal removal steps**

◀A▶ ▶C◀ 1. Timing belt upper cover
2. Camshaft sprocket and timing belt assembly
▶B◀ 3. Camshaft oil seal

**Camshaft removal steps**

- Cylinder head assembly (Refer to P.11C-23.)

◀B▶ 4. Rocker arm and shaft assembly
5. Cam position sensor support
6. Cam position sensing cylinder
▶A◀ 7. Camshaft

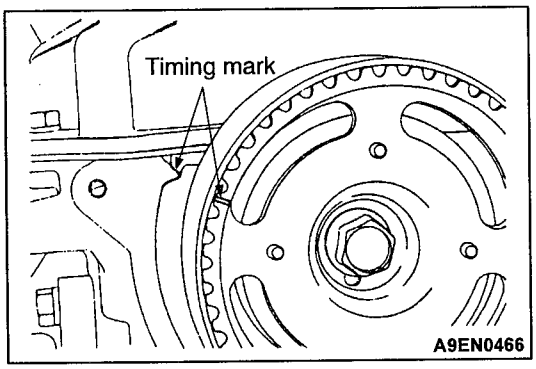


## REMOVAL SERVICE POINTS

### ◀A▶ CAMSHAFT SPROCKET AND TIMING BELT ASSEMBLY REMOVAL

1. Turn the crankshaft clockwise (right turn) to align the timing mark and to set the No.1 cylinder at compression top dead center

   **Caution**
   **The crankshaft should always be turned only clockwise.**

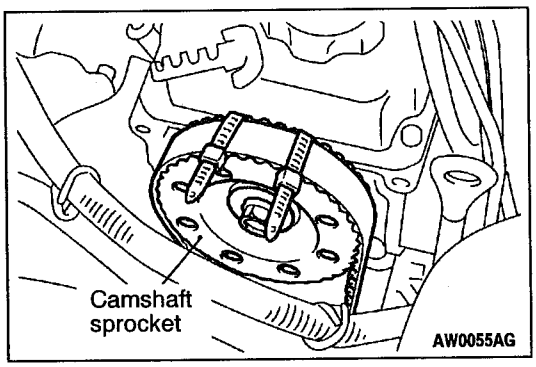


2. Tie the camshaft sprocket and timing belt with a band cable so that the position of the camshaft sprocket will not move with respect to the timing belt.

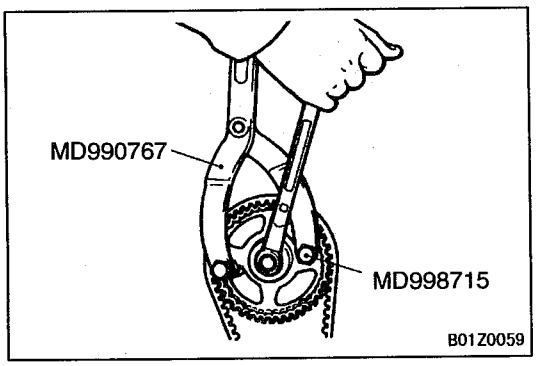


3. Use the special tools to remove the camshaft sprocket with the timing belt attached.

   **Caution**
   **After removing the camshaft sprocket, be sure not to rotate the crankshaft.**

### ◀B▶ ROCKER ARM AND SHAFT ASSEMBLY REMOVAL

Loosen the rocker arm and shaft assembly mounting bolt, and then remove the rocker arm and shaft assembly with the bolt still attached.

**Caution**
**Never disassemble the rocker arm and shaft assembly.**

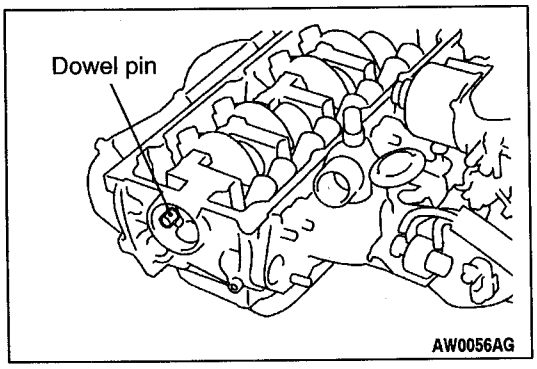


## INSTALLATION SERVICE POINTS

### ▶A◀ CAMSHAFT INSTALLATION

Install the camshaft with the dowel pin at the top position.

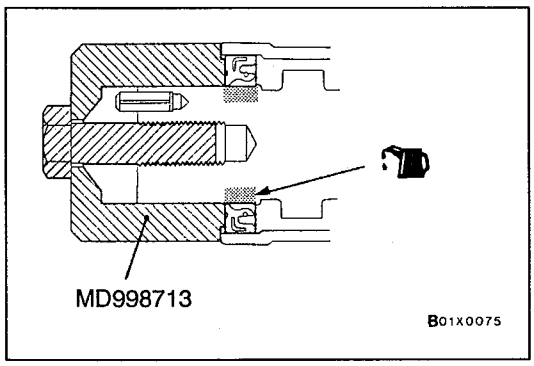


### ▶B◀ CAMSHAFT OIL SEAL INSTALLATION

1. Apply engine oil to the camshaft oil seal lip.
2. Use the special tool to press-fit the camshaft oil seal.

### ▶C◀ CAMSHAFT SPROCKET AND TIMING BELT ASSEMBLY INSTALLATION

1. Use the special tools to stop the camshaft sprocket from turning in the same way as was done during removal, and then tighten the camshaft sprocket securing bolt to the specified torque.

   **Tightening torque: 88 Nm**

2. Remove the band cable which binds the camshaft sprocket and timing belt.

# OIL PAN

## REMOVAL AND INSTALLATION

**Pre-removal and Post-installation Operation**
- Under Cover Removal and Installation
- Engine Oil Draining and Supplying (Refer to GROUP 12 – On-vehicle Service.)
- Oil Level Gauge Removal and Installation

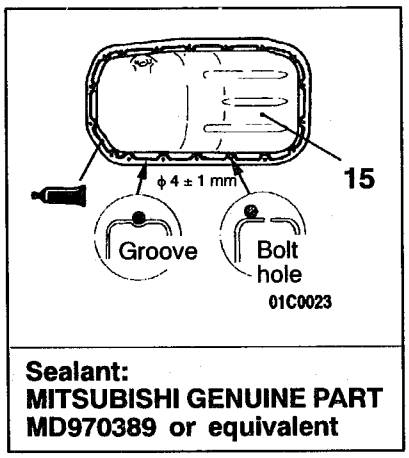





**Removal steps**

1. Splash shield
2. Power steering pressure hose clamp
3. Steering gear box and shaft connection
◀A▶ 4. Steering gear box installation bolts
5. Free-wheeling clutch engage switch connector connection
◀B▶ 6. Front differential mount center bolt
◀B▶ 7. Front differential mount
8. Transmission stay
9. Bell housing cover
10. Drain plug
▶B◀ 11. Drain plug gasket
◀C▶ ▶A◀ 12. Oil pan installation bolts
◀C▶ ▶A◀ 13. Oil screen
◀C▶ ▶A◀ 14. Oil screen gasket
◀C▶ ▶A◀ 15. Oil pan
▶A◀ 16. Oil pan gasket

NOTE
Liquid-type gasket is used as the oil pan gasket for the vehicle shipped from the factory or the engine to be overhauled. If liquid gasket is used during the replacement of the oil pan gasket in the on-vehicle service, the sealing surfaces affect other parts, thereby resulting in oil leaks. So, be sure to use an oil pan gasket supplied as a spare part.

## REMOVAL SERVICE POINTS

### ◀A▶ STEERING GEAR BOX INSTALLATION BOLT REMOVAL

Remove the steering gear box installation bolts and lower the steering gear box.

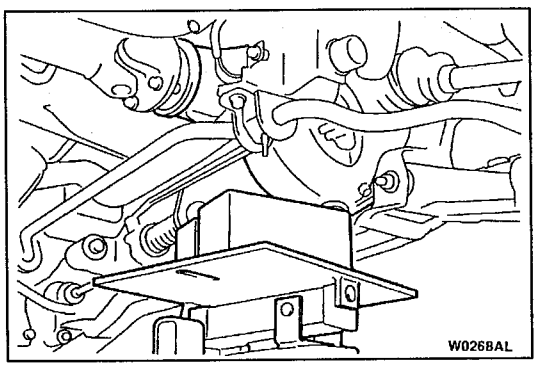


### ◀B▶ FRONT DIFFERENTIAL MOUNT CENTER BOLT/ FRONT DIFFERENTIAL MOUNT REMOVAL

1. Support the front differential by a jack, and remove the front differential mount center bolts and the front differential mount.
2. Remove the jack and lower the front differential.

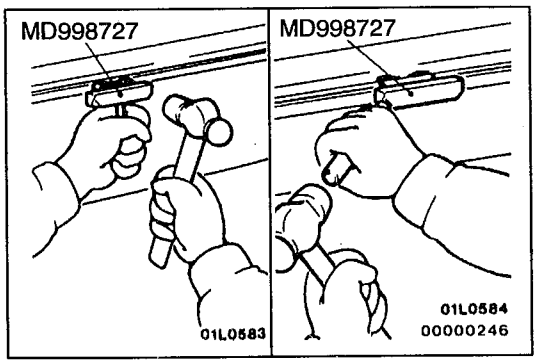


### ◀C▶ OIL PAN INSTALLATION BOLT/OIL SCREEN/OIL SCREEN GASKET/OIL PAN REMOVAL

1. After removing the oil pan installation bolts, use a special tool to remove the oil pan from the engine.

   **Caution**
   **Perform this slowly to avoid deformation of the oil pan flange.**

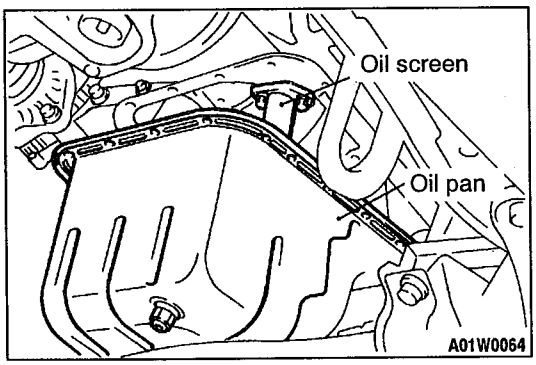


2. With the oil pan removed from the cylinder block, remove the oil screen installation bolts.
3. Remove the oil pan and the oil screen as a set.

## INSTALLATION SERVICE POINTS

### ▶A◀ OIL PAN GASKET/OIL PAN/OIL SCREEN GASKET/OIL SCREEN/OIL PAN INSTALLATION BOLT INSTALLATION

1. Put the oil screen in the oil pan. With the oil pan gasket in position, place the oil pan between the cylinder block and front differential.
2. Install the oil screen gasket and oil screen to the cylinder block.
3. Install the oil pan to the cylinder block.

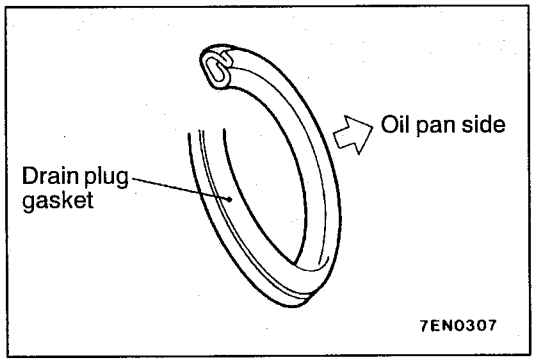


### ▶B◀ DRAIN PLUG GASKET INSTALLATION

Install the drain plug gasket in the direction so that it faces as shown in the illustration.

# CRANKSHAFT OIL SEAL

## REMOVAL AND INSTALLATION

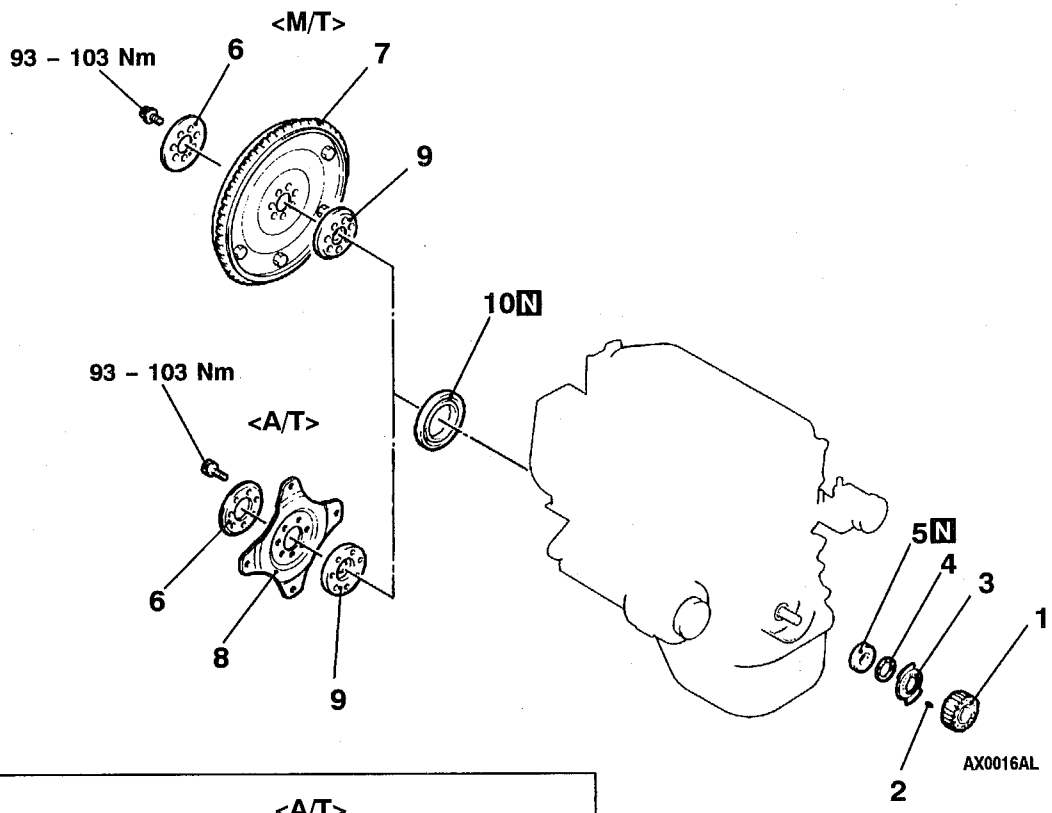


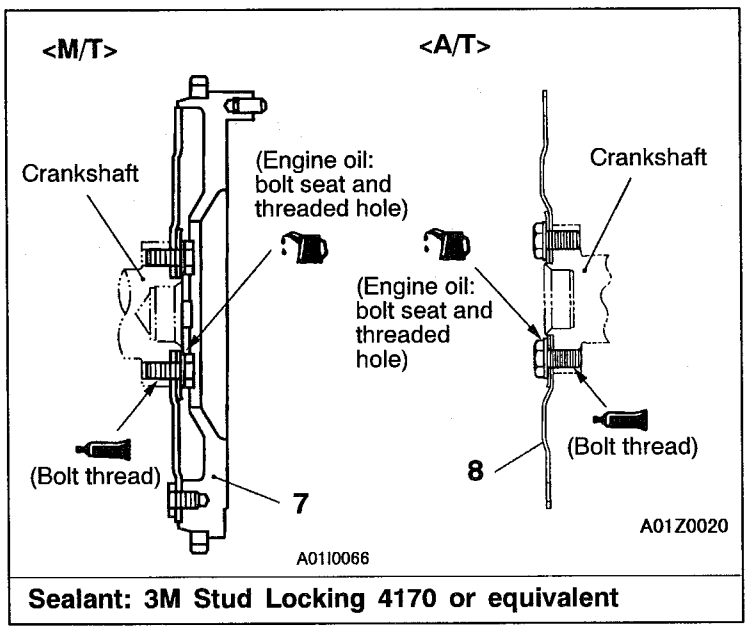


**Sealant: 3M Stud Locking 4170 or equivalent**

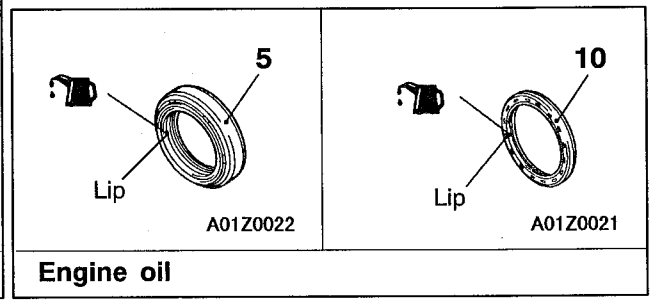


**Engine oil**

**Crankshaft front oil seal removal steps**

- Timing belt (Refer to P.11C-28.)
- Crank angle sensor (Refer to GROUP 16.)

1. Crankshaft sprocket
2. Key
3. Crankshaft sensing blade
4. Crankshaft spacer

▶C◀ 5. Crankshaft front oil seal

**Crankshaft rear oil seal removal steps**

- Transmission assembly (M/T: Refer to GROUP 22.) (A/T: Refer to GROUP 23.)
- Clutch cover and disc <M/T>

◀A▶ ▶B◀ 6. Adapter plate
◀A▶ ▶B◀ 7. Flywheel <M/T>
◀A▶ ▶B◀ 8. Drive plate <A/T>
◀A▶ ▶B◀ 9. Crankshaft adapter
▶A◀ 10. Crankshaft rear oil seal

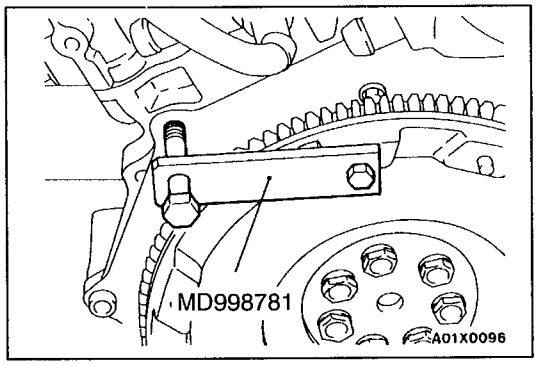


## REMOVAL SERVICE POINTS

### ◀A▶ ADAPTER PLATE/FLYWHEEL <M/T>/DRIVE PLATE <A/T>/CRANKSHAFT ADAPTER REMOVAL

Use the special tool to secure the flywheel or drive plate, and remove the bolts.

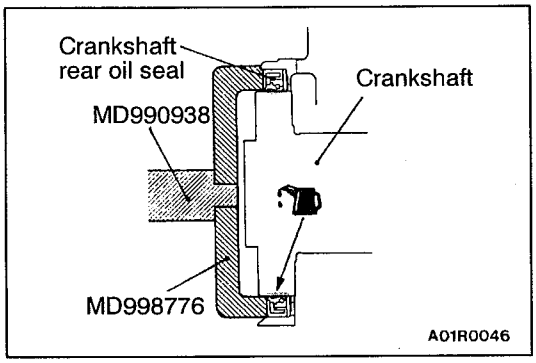


## INSTALLATION SERVICE POINTS

### ▶A◀ CRANKSHAFT REAR OIL SEAL INSTALLATION

1. Apply a small mount of engine oil to the entire circumference of the oil seal lip.
2. Install the oil seal by tapping it as far as the chamfered position of the oil seal case as shown in the illustration.

### ▶A◀ CRANKSHAFT ADAPTER /FLYWHEEL <M/T>/ DRIVE PLATE <A/T>/ADAPTER PLATE INSTALLATION

1. Clean off all sealant, oil and other substances which are adhering to the threaded bolts, crankshaft thread holes and the drive plate.
2. Apply oil to the bearing surface of the drive plate bolts.
3. Apply oil to the crankshaft thread holes.
4. Apply sealant to the threaded mounting holes.

   **Specified sealant: 3M Stud locking 4170 or equivalent**
5. Use the special tool to hold the drive plate in the same manner as removal, and install the bolt.

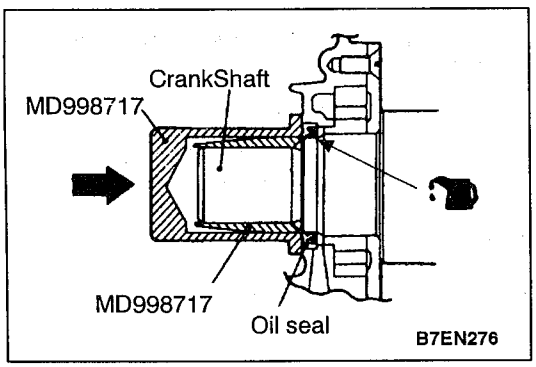


### ▶C◀ CRANKSHAFT FRONT OIL SEAL INSTALLATION

1. Apply a small amount of engine oil to the entire circumference of the oil seal lip.
2. Tap the oil seal unit it is flush with the oil seal case.

# CYLINDER HEAD GASKET

## REMOVAL AND INSTALLATION

**Pre-removal and Post-installation Operation**
- Fuel Discharge Prevention (Refer to GROUP 13C – On-vehicle Service.) <Pre-removal only>
- Engine Coolant Draining and Supplying (Refer to GROUP 14 – On-vehicle Service.)
- Engine Oil Draining and Supplying (Refer to GROUP 12 – On-vehicle Service.)
- Exhaust Manifold Removal and Installation (Refer to GROUP 15.)
- Water Bypass Pipe Removal and Installation (Refer to GROUP 14 – Water Hose and Pipe.)
- Thermostat Case Assembly Removal and Installation (Refer to GROUP 14 – Water Hose and Pipe.)
- Ignition Coil Removal and Installation (Refer to GROUP 16.)
- Timing Belt Removal and Installation (Refer to P.11C-28.)

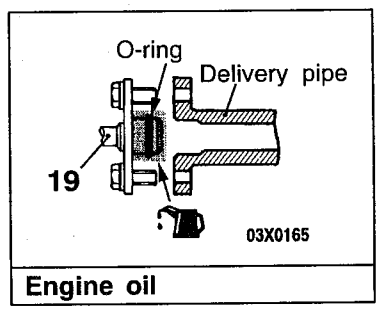

Engine oil

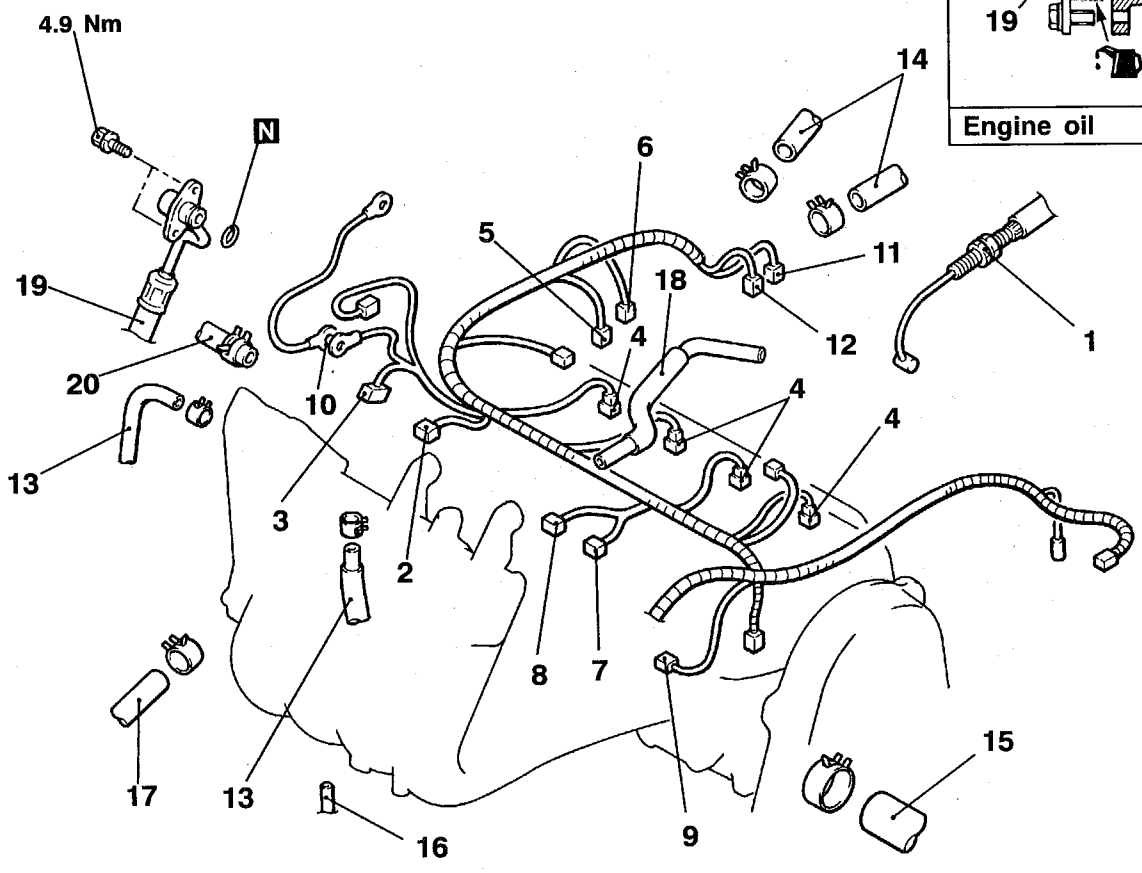

AX0055AL

**Removal steps**
1. Accelerator cable connection
2. Throttle position sensor connector
3. Idle speed control servo connector
4. Injector connector
5. Variable resister connector
6. Cam position sensor connector
7. EGR solenoid valve connector
8. Purge control solenoid valve connector
9. Detonation sensor connector
10. Earth cable connection
11. Engine coolant temperature sensor connector
12. Engine coolant temperature gauge unit connector
13. Water hose connection
14. Heater hose connection
15. Radiator upper hose connection
16. Vacuum hose clamp
17. Brake booster vacuum hose connection
18. PCV hose
▶D◀ 19. High-pressure fuel hose connection
20. Fuel return hose connection

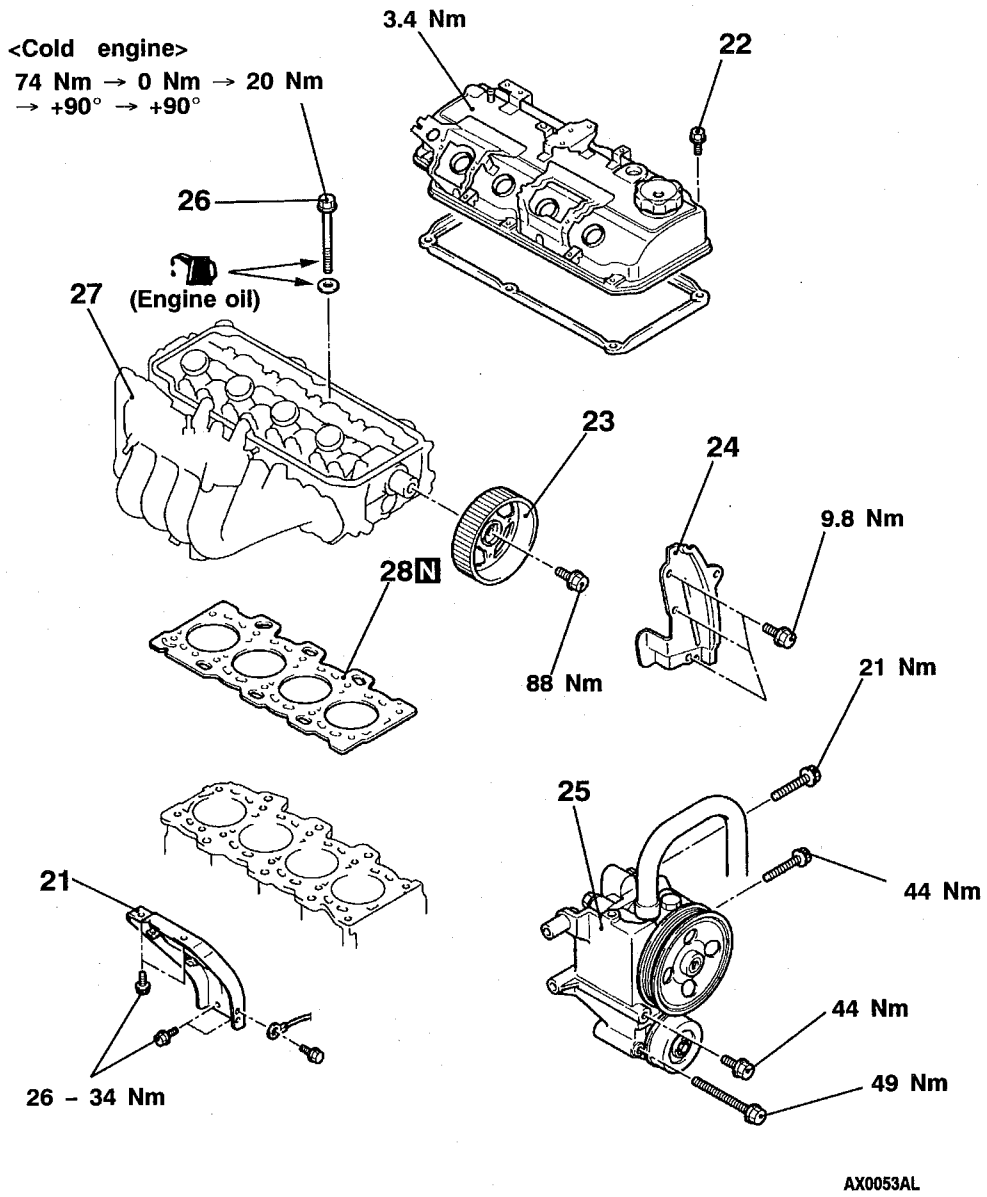


21. Intake manifold stay
22. Rocker cover
◀A▶ ▶C◀ 23. Camshaft sprocket
24. Timing belt under upper cover
◀B▶ 25. Power steering oil pump and bracket assembly
◀C▶ ▶B◀ 26. Cylinder head bolts
27. Cylinder head assembly
▶A◀ 28. Cylinder head gasket

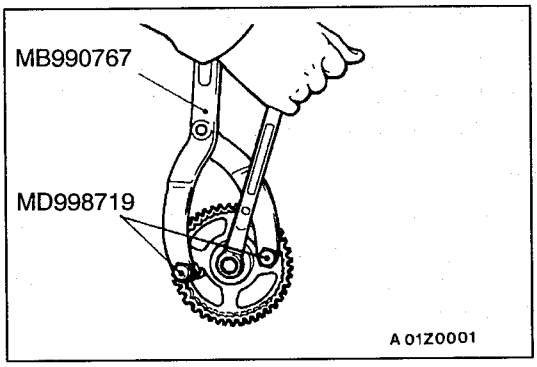


## REMOVAL SERVICE POINTS

### ◀A▶ CAMSHAFT SPROCKET REMOVAL

### ◀B▶ POWER STEERING OIL PUMP AND BRACKET ASSEMBLY REMOVAL

Remove the power steering oil pump and bracket assembly from the engine with the hose attached.

NOTE
Place the removed power steering oil pomp and bracket assembly in a place where it will not be a hindrance when removing and installing the cylinder head assembly, and tie it with a cord.

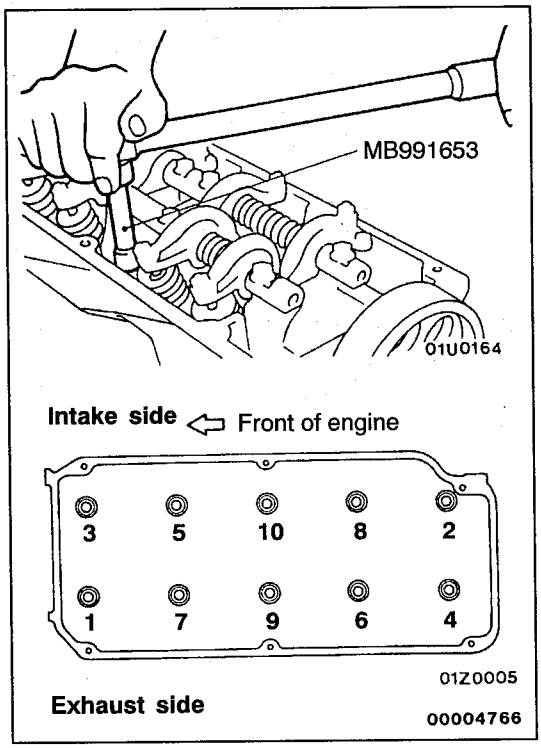


### ◀C▶ CYLINDER HEAD BOLT REMOVAL

Use the special tool to loosen the bolts in two or three steps in the order of the numbers shown in the illustration, and then remove the bolts.
If the washer is caught on valve spring and the bolt is not removed, pull up the bolt slightly and remove the bolt while tilting the washer by using a magnet, etc.

## INSTALLATION SERVICE POINTS

### ▶A◀ CYLINDER HEAD GASKET INSTALLATION

1. Wipe off all oil and grease from the gasket mounting surface.
2. Install so that the shapes of the cylinder head holes match the shapes of the respective cylinder head gasket holes.

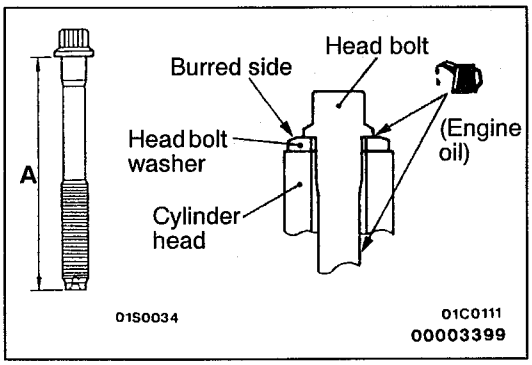


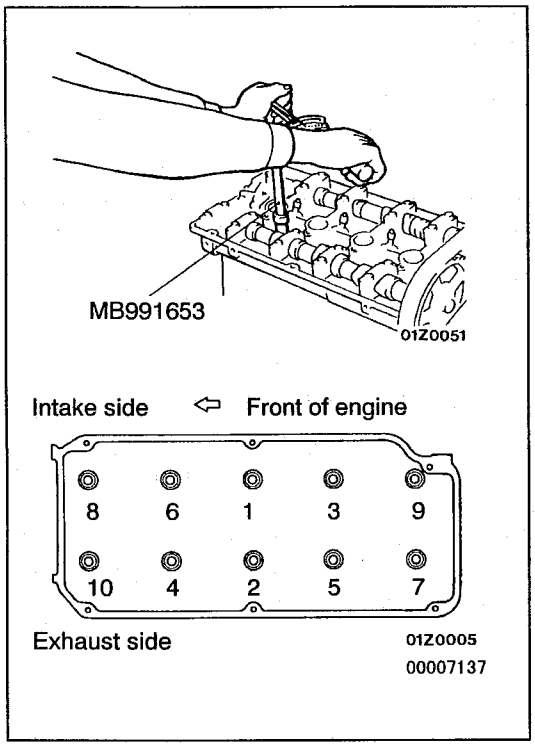


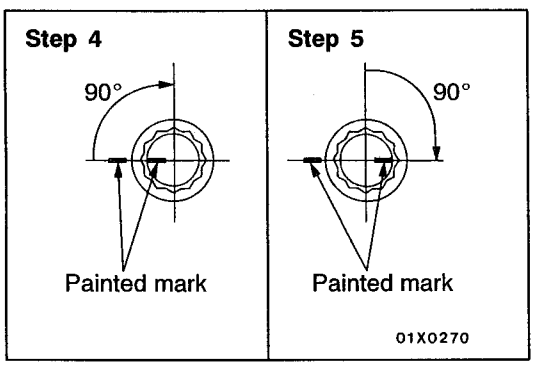


## ▶B◀ CYLINDER HEAD BOLT INSTALLATION

1. When installing the cylinder head bolts, the length below the head of the bolts should be within the limit. If it is outside the limit, replace the bolts.
   **Limit (A): 96.4 mm**
2. The head bolt washer should be installed with the burred side caused by tapping out facing upwards.
3. Apply a small amount of engine oil to the thread section and the washer of the cylinder head bolt.
4. Tighten the bolts by the following procedure.

| Step | Operation | Remarks |
|---|---|---|
| 1 | Tighten to 74 Nm. | Carry out in the order shown in the illustration. |
| 2 | Fully loosen. | Carry out in the reverse order of that shown in the illustration. |
| 3 | Tighten to 20 Nm. | Carry out in the order shown in the illustration. |
| 4 | Tighten 90° of a turn. | In the order shown in the illustration. Mark the head of the cylinder head bolt and cylinder head by paint. |
| 5 | Tighten 90° of a turn. | In the order shown in the illustration. Check that the painted mark of the head bolt is lined up with that of the cylinder head. |

**Caution**

1. **Always make a tightening angle just 90°. If it is less than 90°, the head bolt will be loosened.**
2. **If it is more than 90°, remove the head bolt and repeat the procedure from step 1.**

## ▶C◀ CAMSHAFT SPROCKET INSTALLATION

Use the special tool to stop the the camshaft sprocket from turning in the same way as was done during removal, and then tighten the bolts to the specified torque.

### ▶D◀ HIGH-PRESSURE FUEL HOSE INSTALLATION

1. Apply a small mount of engine oil to the O-ring.

   **Caution**
   **Do not let any engine oil get into the delivery pipe.**

2. While turning the high-pressure fuel hose to the right and left, install the delivery pipe, while being careful not to damage the O-ring. After installing, check that the hose turns smoothly.
3. If the hose does not turn smoothly, the O-ring is probably being clamped. Disconnect the high-pressure fuel hose and check the O-ring for damage. After this, re-insert the delivery pipe and check that the hose turns smoothly.

# TIMING BELT

## REMOVAL AND INSTALLATION

**Pre-removal and Post-installation Operation**
- Under Cover Removal and Installation
- Air Intake Pipe Removal and Installation (Refer to GROUP 15 – Air Cleaner.)
- Crankshaft Pulley Removal and Installation (Refer to P.11C-14.)

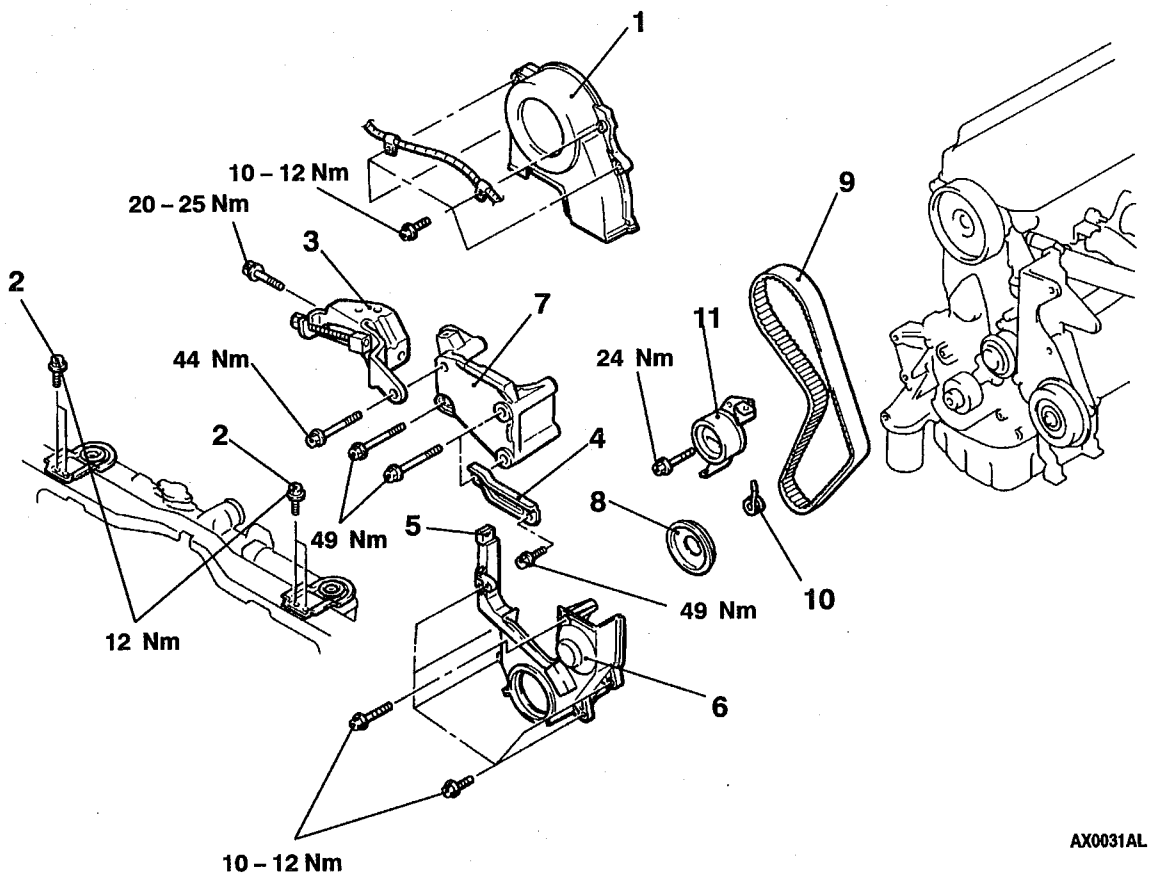


**Removal steps**

1. Timing belt front upper cover
2. Radiator upper installation bolts
3. Alternator brace
4. Power steering oil pump bracket stay
5. Crank angle sensor connector
6. Timing belt front lower cover

◀A▶ ▶C◀ ▶B◀ ▶A◀ ▶A◀ ▶A◀

7. Accessory mount
8. Flange
- Timing belt tension adjustment
9. Timing belt
10. Tensioner spring
11. Timing belt tensioner

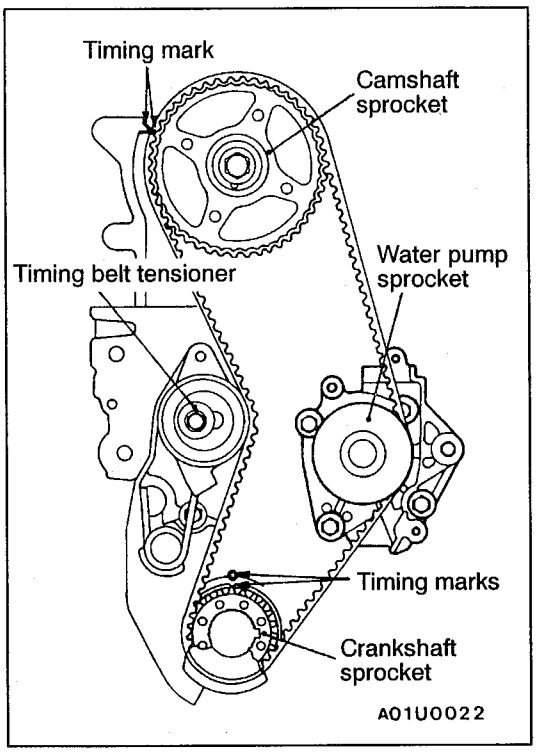


## REMOVAL SERVICE POINT

### ◀A▶ TIMING BELT REMOVAL

1. Turn the crankshaft clockwise (right turn) to align each timing mark and to set the No. 1 cylinder at compression top dead centre.

**Caution**
**The crankshaft should always be turned only clockwise.**

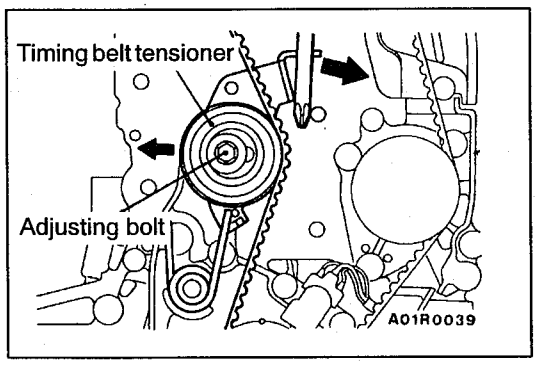


2. Loosen the adjusting bolt.
3. Set a screwdriver to the timing belt tensioner and press it fully back in the direction of the arrow.
4. Provisionally tighten the adjusting bolt.
5. Remove the timing belt.

**Caution**
**If the timing belt is to be re-used, use chalk to mark the flat side of the belt with an arrow indicating the direction of rotation (right turn).**

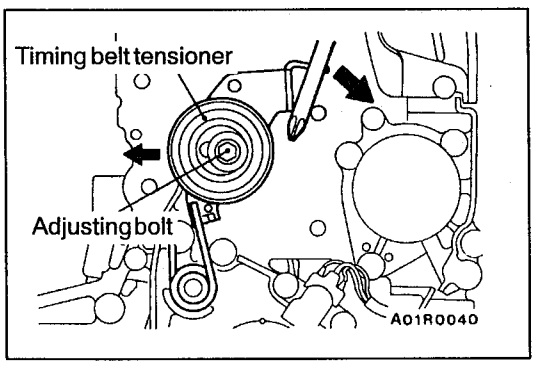


## INSTALLATION SERVICE POINTS

### ▶A◀ TIMING BELT INSTALLATION

1. Set a screwdriver to the timing belt tensioner and press it fully back in the direction of the arrow.
2. Provisionally tighten the adjusting bolt.

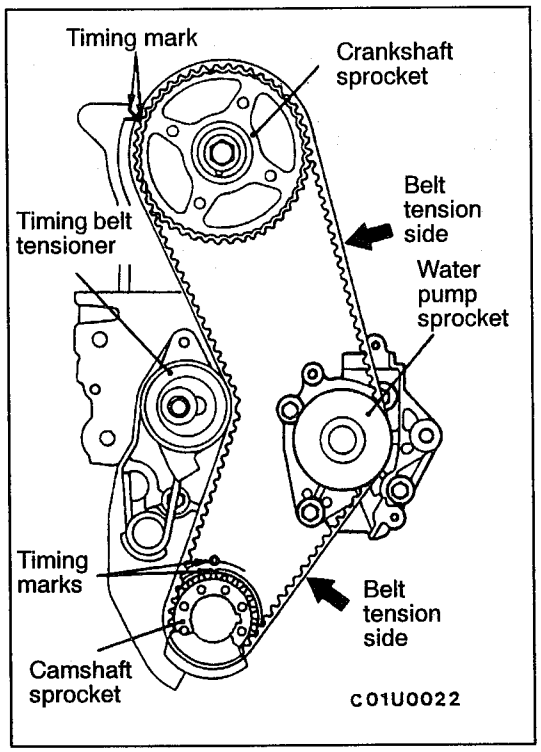


3. Align each of the camshaft sprocket and the crankshaft sprocket timing marks.
4. Install the timing belt in the following order, while making sure that the tension side of the belt is not slackened.
   (1) Crankshaft sprocket
   (2) Water pump sprocket
   (3) Camshaft sprocket
   (4) Tensioner pulley

**Caution**
**After installing the timing belt, apply force to turn the camshaft sprocket in the reverse direction, and recheck to be sure that the belt is fully tensioned and that each timing mark is in the proper position.**

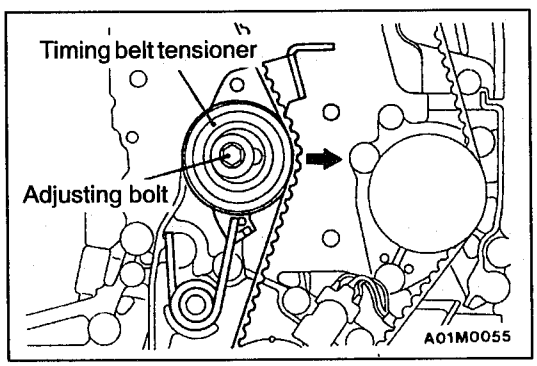


### ▶B◀ TIMING BELT TENSION ADJUSTMENT

1. Loosen the adjusting bolt of the temporarily secured timing belt tensioner by 1/4 – 1/2 turn, and use the force of the tensioner spring to apply tension to the belt.
2. Turn the crankshaft in the proper rotation direction (right turn) for two rotations, and recheck to be sure that the timing marks on each sprocket are aligned.

**Caution**
**As the purpose of this procedure is to apply the proper amount of tension to the tension side of the timing belt by using the cam driving torque, turn the crankshaft only by the amount given above. Be sure not to turn the crankshaft in the opposite direction (left turn).**

3. After checking to be sure that no belt teeth in the section marked with A are lifted up and that the teeth in each sprocket are engaged, secure the tensioner pulley.

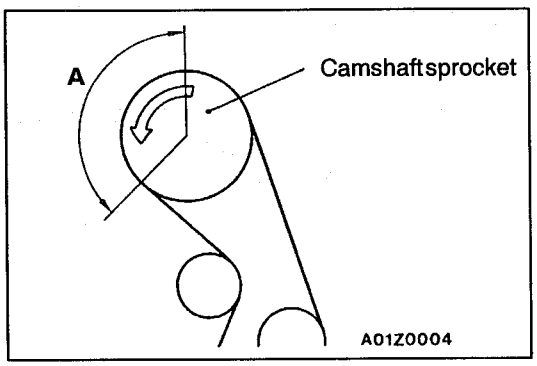


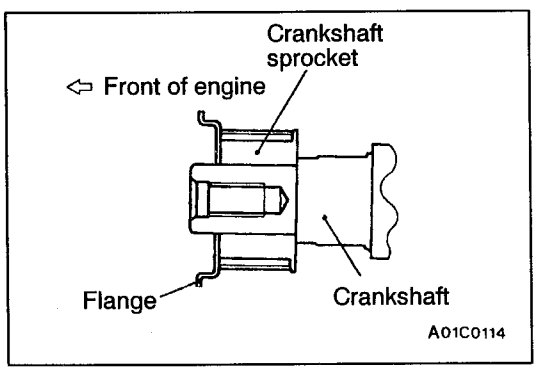


### ▶C◀ FLANGE INSTALLATION

Install the flange as shown in the illustration.

# ENGINE ASSEMBLY

## REMOVAL AND INSTALLATION

**Caution**
***: Indicates parts which should be temporarily tightened, and then fully tightened with the vehicle on the ground in the unladen condition.**

**Pre-removal and Post-installation Operation**
- Fuel Line Pressure Releasing <before removal only> (Refer to GROUP 13C – On-vehicle Service.)
- Accelerator Cable Adjustment <after installation only> (Refer to GROUP 17 – On-vehicle Service.)
- Drive Belt Tension Adjustment <after installation only> (Refer to P.11C-5.)
- Hood Removal and Installation (Refer to GROUP 42.)
- Radiator Assembly Removal and Installation (Refer to GROUP 14.)
- Under Cover Removal and Installation
- Air Cleaner and Air Intake Pipe Removal and Installation (Refer to GROUP 15.)
- Front Exhaust Pipe Removal and Installation (Refer to GROUP 15.)
- Transmission Assembly Removal and Installation (Refer to GROUP 22, 23.)

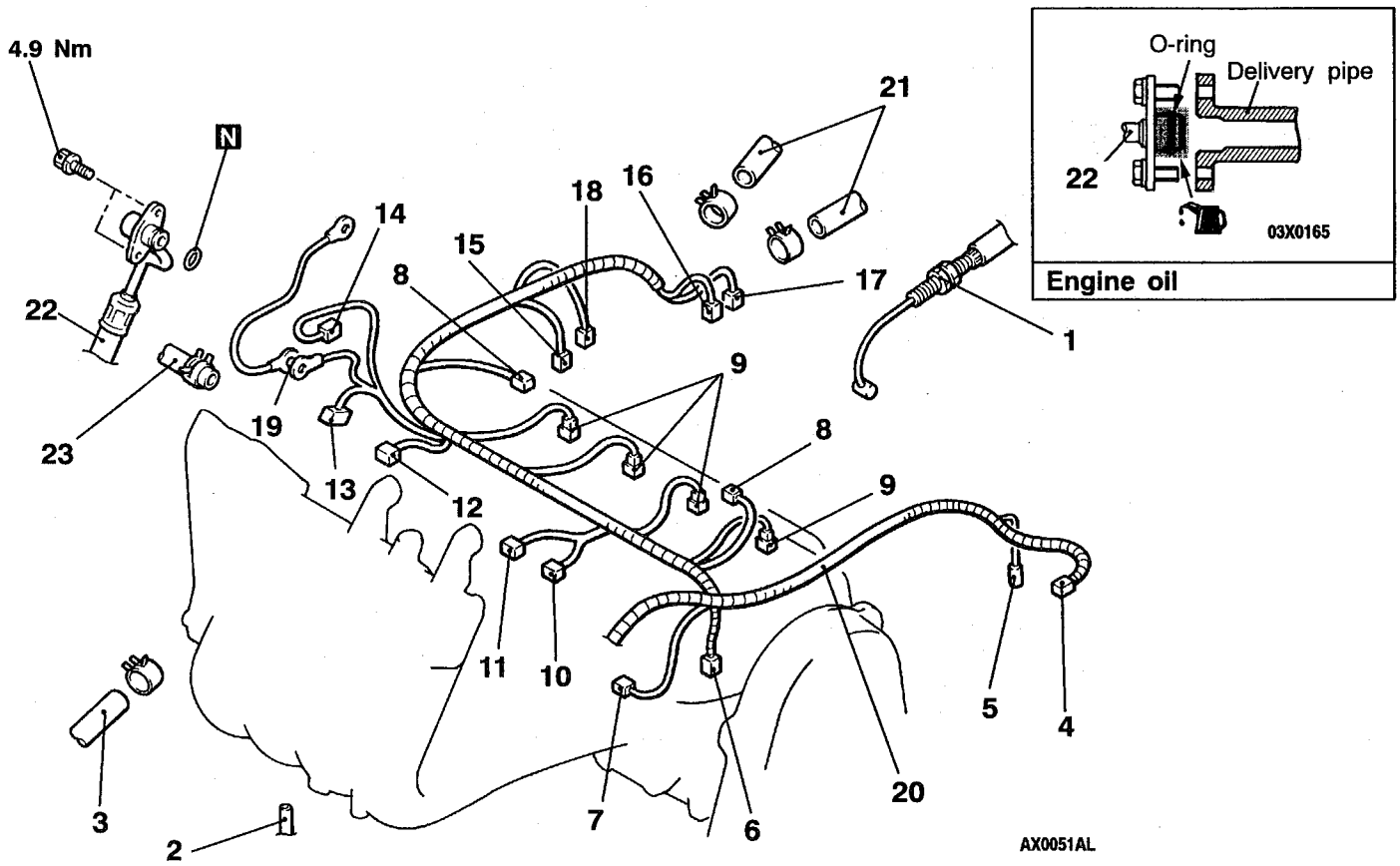


**Removal steps**
1. Accelerator cable connection
2. Vacuum hoses connection
3. Brake booster vacuum hose connection
4. A/C compressor magnetic clutch connector
5. Power steering oil pressure switch connector
6. Crank angle sensor connector
7. Detonation sensor
8. Ignition coil connector
9. Injector connector
10. Purge control solenoid valve connector
11. EGR solenoid valve connector
12. TPS connector
13. Idle speed control servo connector
14. Capacitor connector
15. Variable resistor connector
16. Engine coolant temperature gauge unit connector
17. Engine coolant temperature sensor connector
18. Camshaft position sensor connector
19. Earth cable connection
20. Engine harness clamp
21. Heater hoses connection

▶B◀ 22. High-pressure fuel hose connection
23. Fuel return hose connection

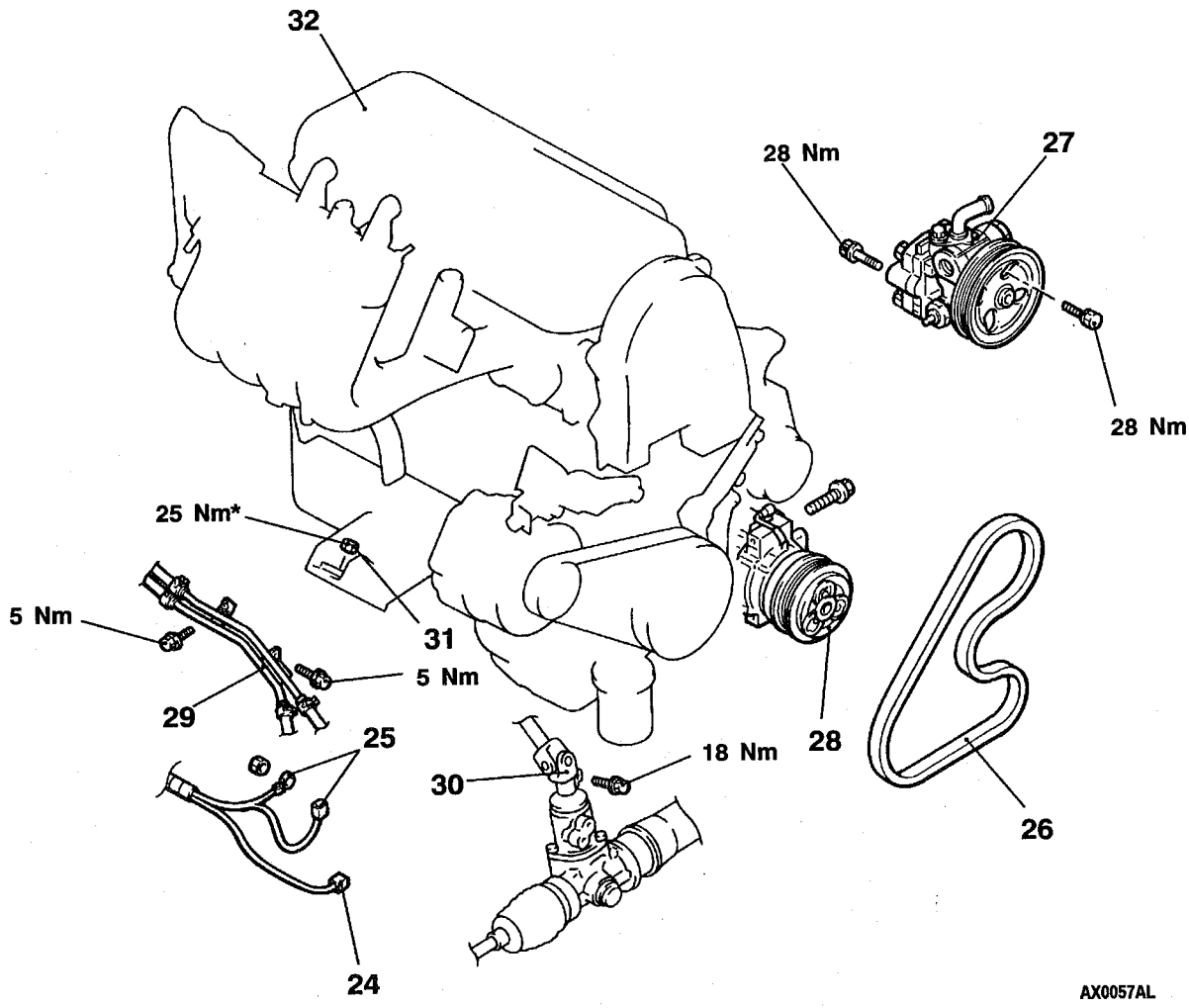


24. Oil pressure switch connector
25. Alternator connector
26. Drive belt (power steering, A/C)
27. Power steering oil pump assembly
28. A/C compressor
29. A/T oil pipe clamp
30. Steering gear box and shaft connection
31. Engine mount installation nut
32. Engine assembly

◀A▶ ◀B▶ ◀C▶ ▶A◀

## REMOVAL SERVICE POINTS

### ◀A▶ POWER STEERING OIL PUMP REMOVAL

Remove the power steering oil pump with the hose attached from the engine.

NOTE
Place the removed power steering oil pump where it will not be a hindrance when removing and installing the engine assembly, and tie it with a cord.

### ◀B▶ A/C COMPRESSOR REMOVAL

Disconnect the A/C compressor connector and remove the compressor from the compressor bracket with the hose still attached.

NOTE
Place the removed A/C compressor where it will not be a hindrance when removing and installing the engine assembly, and tie it with a cord.

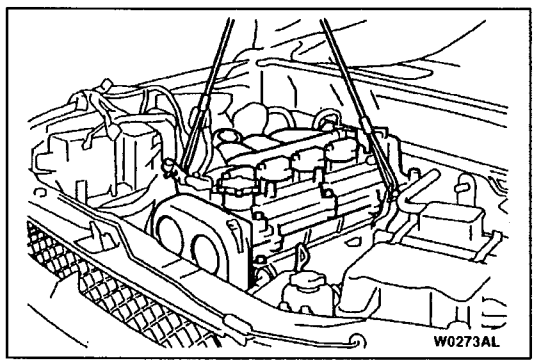


### ◀C▶ ENGINE ASSEMBLY REMOVAL

1. Check that all cables, hoses and harness connectors, etc. are disconnected from the engine.
2. Lift the chain block slowly to remove the engine assembly upward from the engine compartment.

## INSTALLATION SERVICE POINTS

### ▶A◀ ENGINE ASSEMBLY INSTALLATION

Install the engine assembly, checking that the cables, hoses, and harness connectors are not clamped.

### ▶B◀ FUEL HIGH PRESSURE HOSE INSTALLATION

1. Apply a small amount of new engine oil to the O-ring.

   **Caution**
   **Do not let any engine oil get into the delivery pipe.**
2. While turning the fuel high-pressure hose to the right and left, install the delivery pipe, while being careful not to damage the O-ring. After installing, check that the hose turns smoothly.
3. If the hose does not turn smoothly, the O-ring is probably being clamped. Disconnect the fuel high-pressure hose and check the O-ring for damage. After this, re-insert the delivery pipe and check that the hose turns smoothly.

**NOTES**